GPR 50

Chassis number prefix: ZDPVXA00

Assembly	Tables
Code	15
Description	Air filter
Review	1

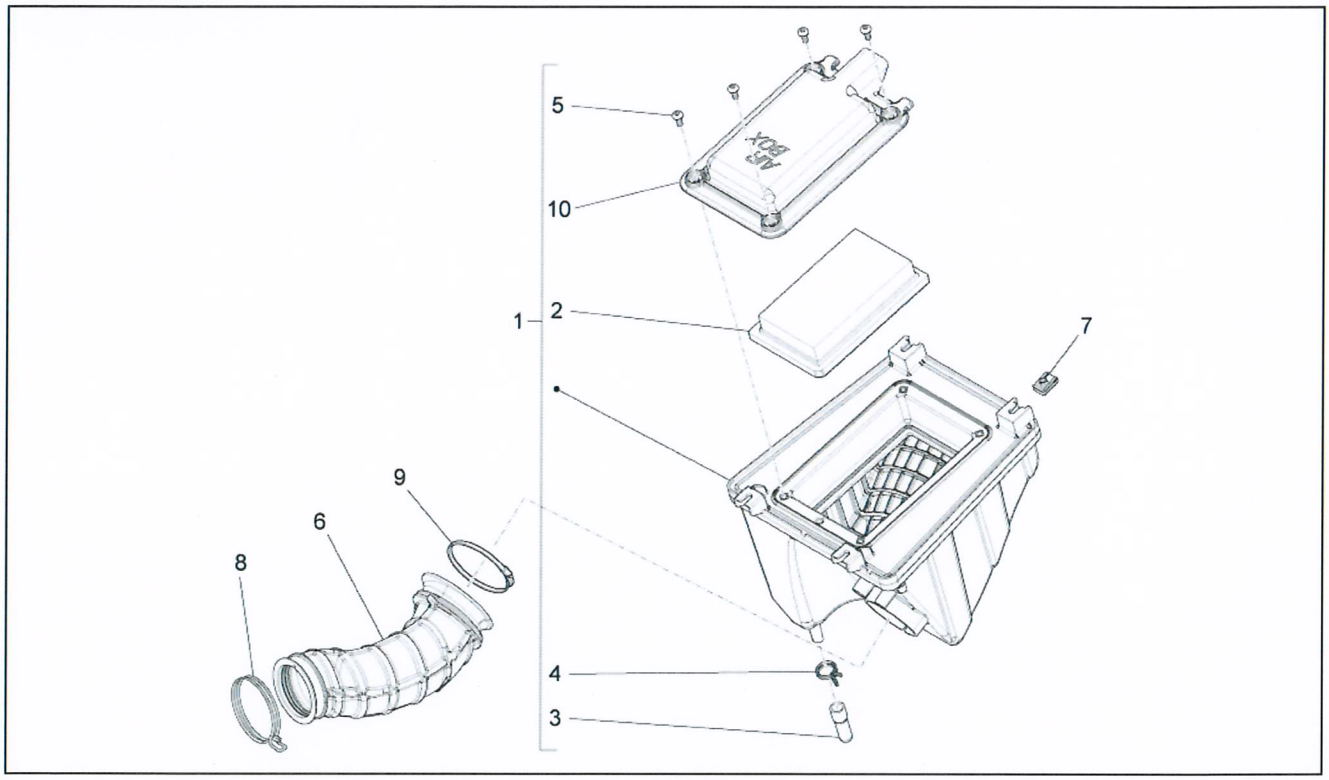

FILTERS: none

Pos.	Code	Description	Q.ty	Variants
1	867175	Air box	1	
2	861130	Air filter	1	
3	862403	pipe	1	
4	862404	Hose clamp	1	
5	AP8152272	Screw w/ flange M5x12	4	
6	866160	Hose	1	
7	AP8102375	Clip m5	4	
8	00G03204272	Spring	1	
9	AP8102401	Hose clamp D50-70x8*	1	
10	866735	Intake cover	1	

Assembly	Tables
Code	05
Description	Body
Review	1

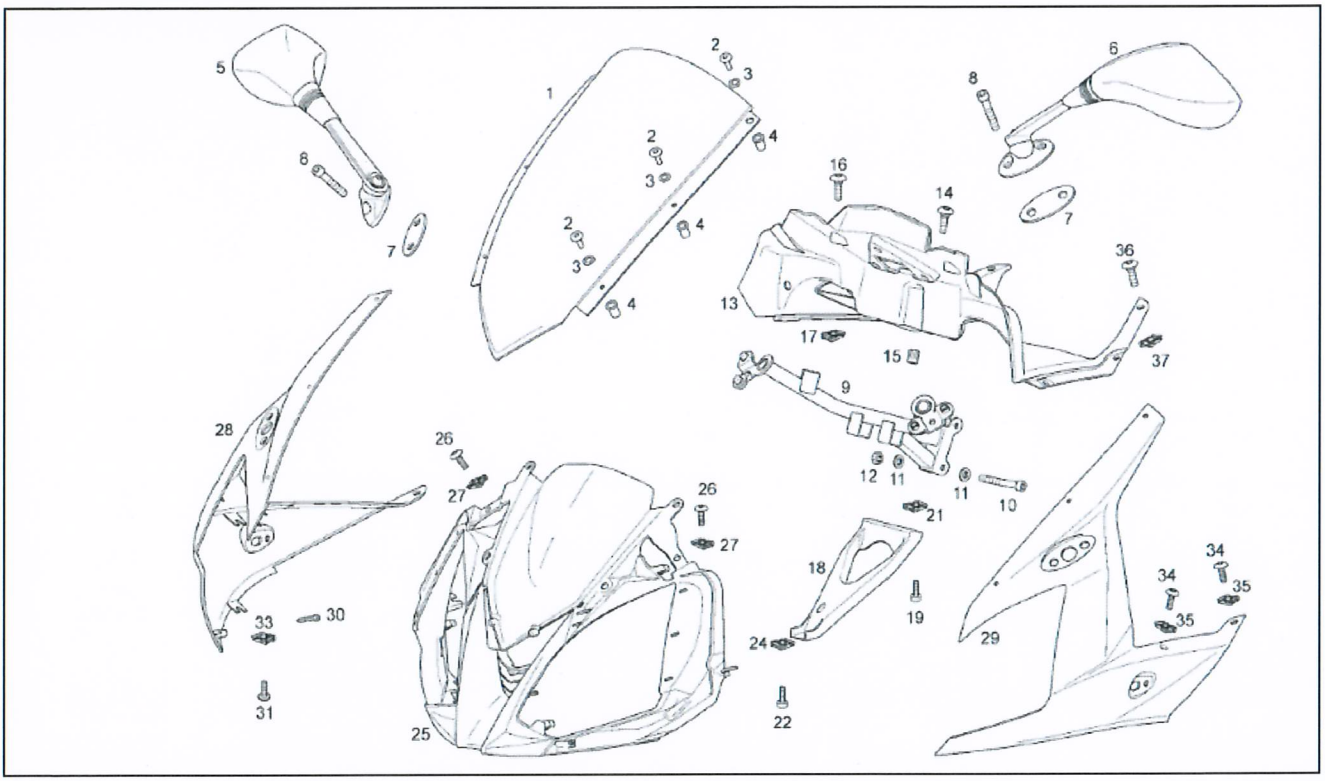

FILTERS: none

Pos.	Code	Description	Q.ty	Variants
1	865923	Windshield	1	
2	AP8150493	Hex socket screw M4x16	1	
3	895916	Plastic washer	1	
4	AP8144564	Rubber w/ insert M4	1	
5	866221	RH rearview mirror	1	
6	866222	LH rearview mirror	1	
7	865946	Mirrors gasket	1	
8	AP8224470	Hex socket screw M6x20	1	
9	866091	Front fairing support	1	
10	AP8152282	Screw w/ flange M6x35	1	
11	00402060001	Washer D6 DIN125 AZNB	1	
12	AP8152299	Self-locking nut M6	1	
13	865926	Socket support	1	
14	00H01501701	screw	1	
15	AP8102544	Threaded rivet M6	1	
16	AP8152339	Screw w/ flange M5x9	1	
17	AP8102375	Clip m5	1	
18	866137	Fairing lower support	1	
19	896174	Hex socket screw Black M5x12	1	
21	AP8102375	Clip m5	1	
22	896174	Hex socket screw Black M5x12	1	
24	AP8102375	Clip m5	1	
25	86592500W4N	Front fairing	1	
26	00H06300861	screw 6X14	1	
27	254485	Spring plate M6	1	
28	86592400XN1	RH front fairing, black	1	
29	86594800XN1	LH front fairing, black	1	

Assembly	Tables
Code	05
Description	Body
Review	1

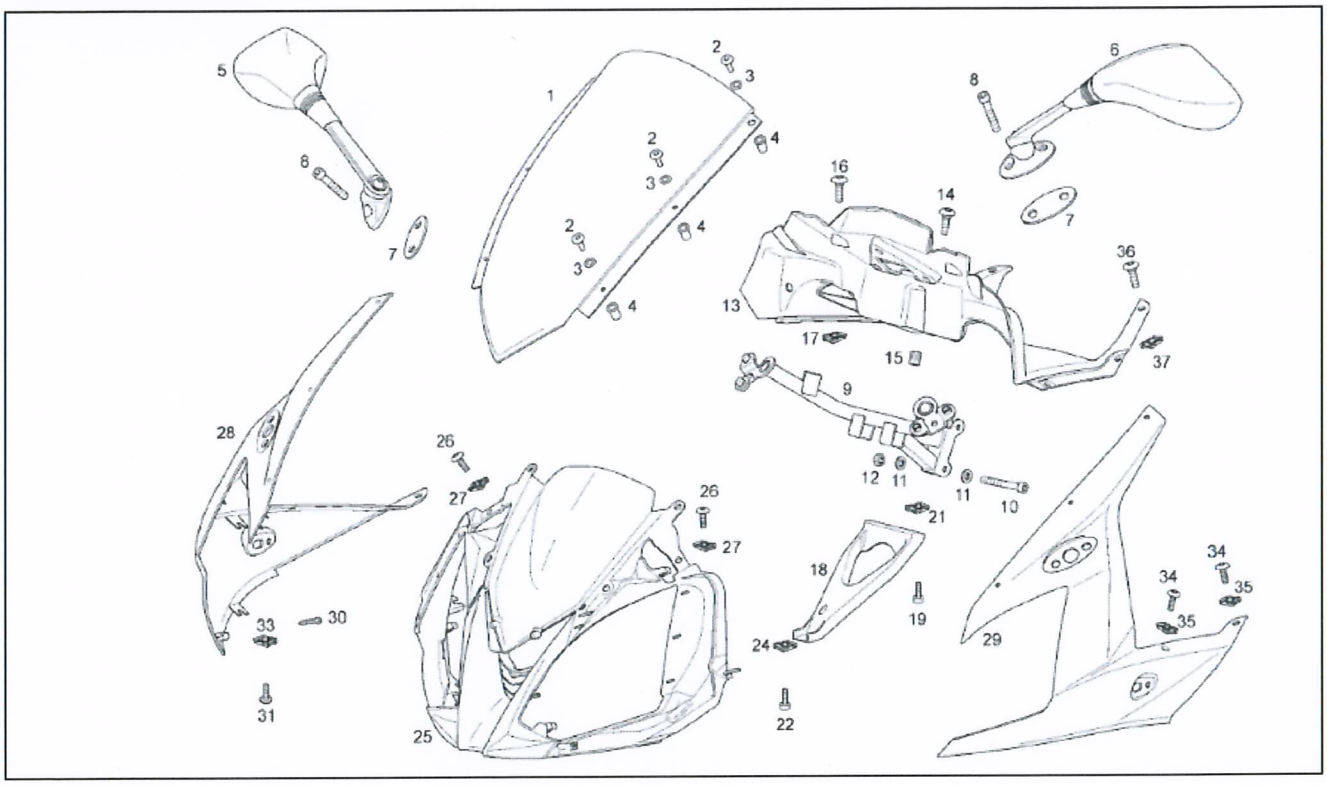

FILTERS: none

Pos.	Code	Description	Q.ty	Variants
30	AP8150246	Screw	1	
31	896174	Hex socket screw Black M5x12	1	
33	00G04401462	Nut D5	1	
34	AP8152302	Screw w/ flange M5x12	1	
35	AP8102375	Clip m5	1	
36	AP8152302	Screw w/ flange M5x12	1	
37	00G04401462	Nut D5	1	

Assembly	Tables
Code	28
Description	Body
Review	1

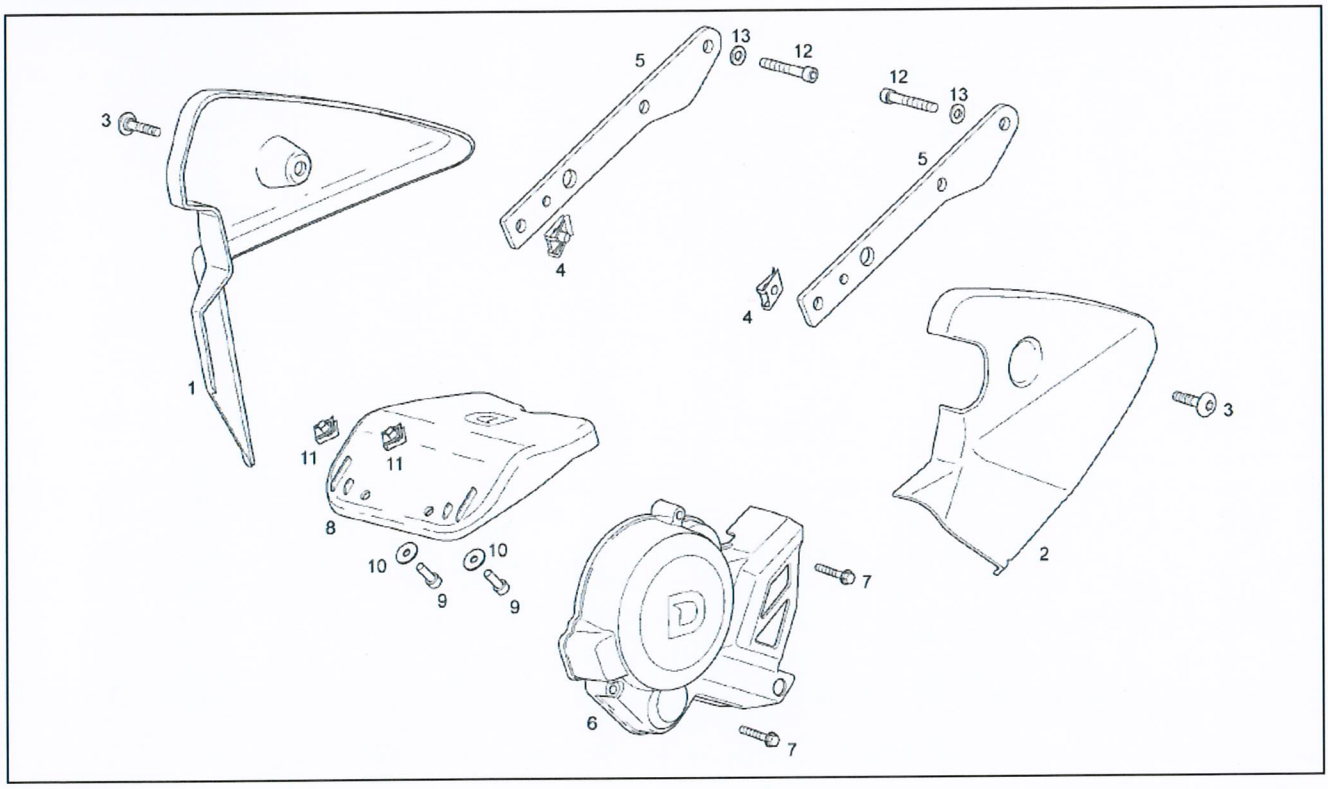

FILTERS: none

Pos.	Code	Description	Q.ty	Variants
1	865931	RH cover	1	
2	865932	LH cover	1	
3	AP8152339	Screw w/ flange M5x9	1	
4	AP8102375	Clip m5	1	
5	865778A	Support bracket	1	
6	00H03007241	Cover	1	
7	AP8152281	Screw w/ flange M6x30	1	
8	866644	Water protection	1	
9	AP8152272	Screw w/ flange M5x12	1	
10	AP8150501	Washer	1	
11	00G04401462	Nut D5	1	
12	AP8152278	Screw w/ flange M6x16	1	
13	00402060001	Washer D6 DIN125 AZNB	1	

Assembly	Tables
Code	07
Description	Body
Review	1

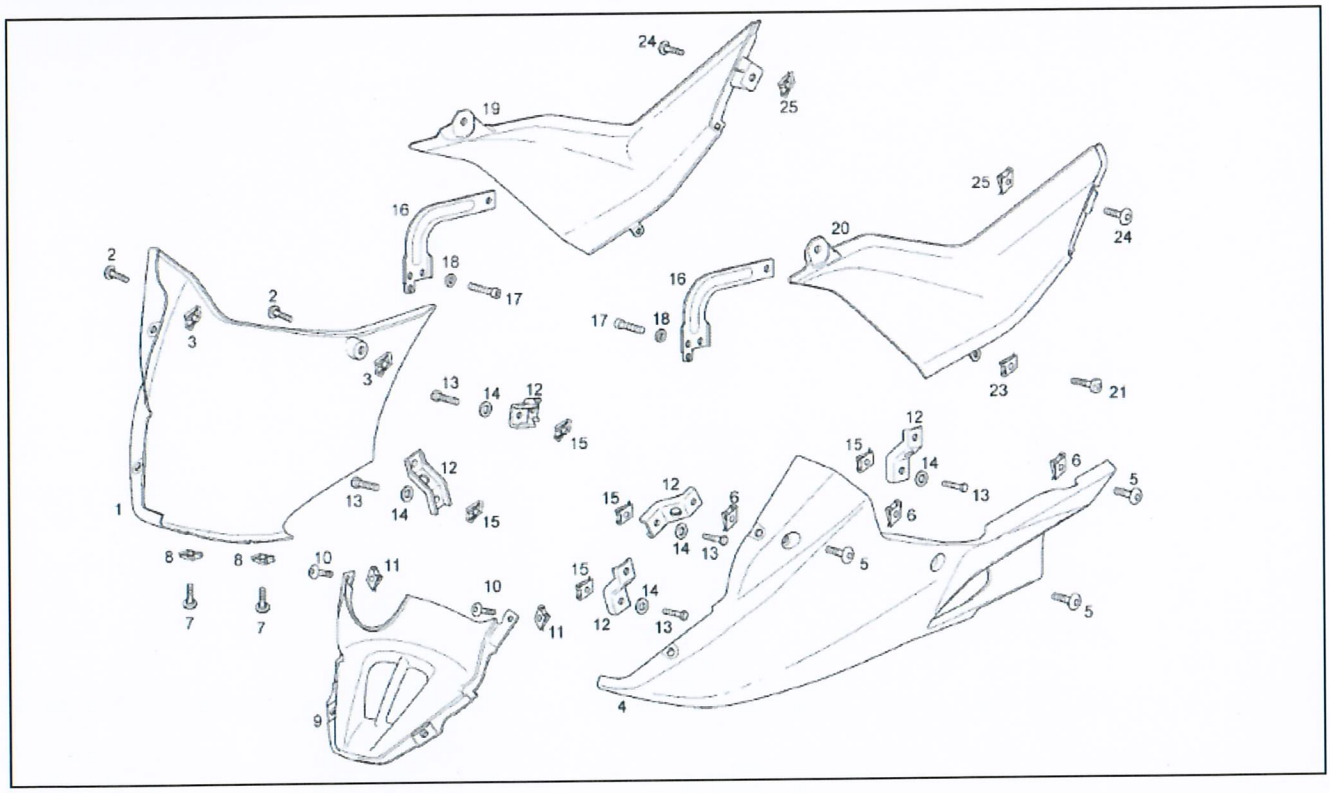

FILTERS: none

Pos.	Code	Description	Q.ty	Variants
1	86593900W3N	RH side panel,lower	1	Technical specification: Without Decal [ND]
2	AP8152302	Screw w/ flange M5x12	1	
3	AP8102375	Clip m5	1	
4	86594000W3N	LH side panel, lower	1	Technical specification: Without Decal [ND]
5	AP8152302	Screw w/ flange M5x12	1	
6	AP8102375	Clip m5	1	
7	AP8152339	Screw w/ flange M5x9	1	
8	AP8102375	Clip m5	1	
9	86651700W3N	Pillar	1	
10	AP8152339	Screw w/ flange M5x9	1	
11	00G04401462	Nut D5	1	
12	866012	Fairing fixing plate	1	
13	896174	Hex socket screw Black M5x12	1	
14	AP8150501	Washer	1	
15	AP8102375	Clip m5	1	
16	866089	Bracket	1	
17	AP8152278	Screw w/ flange M6x16	1	
18	00402060001	Washer D6 DIN125 AZNB	1	
19	865935	RH cover	1	
20	865936	LH cover	1	
21	896174	Hex socket screw Black M5x12	1	
23	00G04401462	Nut D5	1	
24	AP8152339	Screw w/ flange M5x9	1	
25	AP8102375	Clip m5	1	

Assembly	Tables
Code	06
Description	Body
Review	1

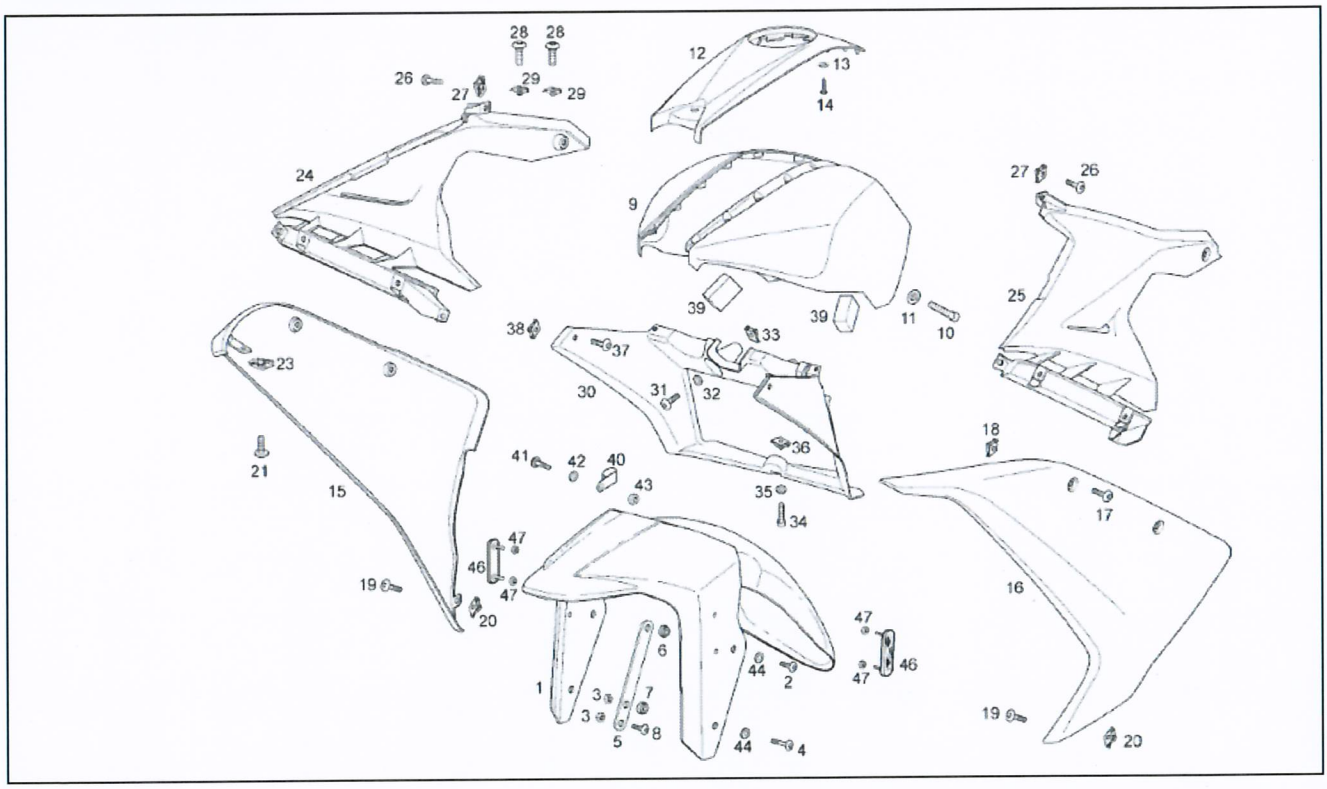

FILTERS: none

Pos.	Code	Description	Q.ty	Variants
1	867342	Front mudguard	1	Technical specification: Without Decal [ND]
2	00H01501701	screw	1	
3	AP8152299	Self-locking nut M6	1	
4	00H01503701	screw	1	
5	867258	Front splash guard support	1	
6	AP8121032	Bush	1	
7	00H00700321	Bush	1	
8	AP8152137	Hex socket screw M6x20	1	
9	86593300XN1	Fuel tank cover, black	1	
10	AP8152272	Screw w/ flange M5x12	1	
11	AP8150501	Washer	1	
12	86593400W4N	Tank cover	1	
13	895916	Plastic washer	1	
14	AP8150444	Self-tapping screw	1	
15	86592700XN1	RH lat.fairing, black	1	Technical specification: Without Decal [ND]
16	86592800XN1	LH lat.fairing, black	1	Technical specification: Without Decal [ND]
17	AP8152302	Screw w/ flange M5x12	1	
18	00G04401462	Nut D5	1	
19	AP8152302	Screw w/ flange M5x12	1	
20	00G04401462	Nut D5	1	
21	AP8152272	Screw w/ flange M5x12	1	
23	AP8102375	Clip m5	1	
24	86593000W4N	RH side fairing	1	
25	86592900W4N	LH side fairing	1	
26	00H01501701	screw	1	
27	254485	Spring plate M6	1	
28	AP8152302	Screw w/ flange M5x12	1	

Assembly	Tables
Code	06
Description	Body
Review	1

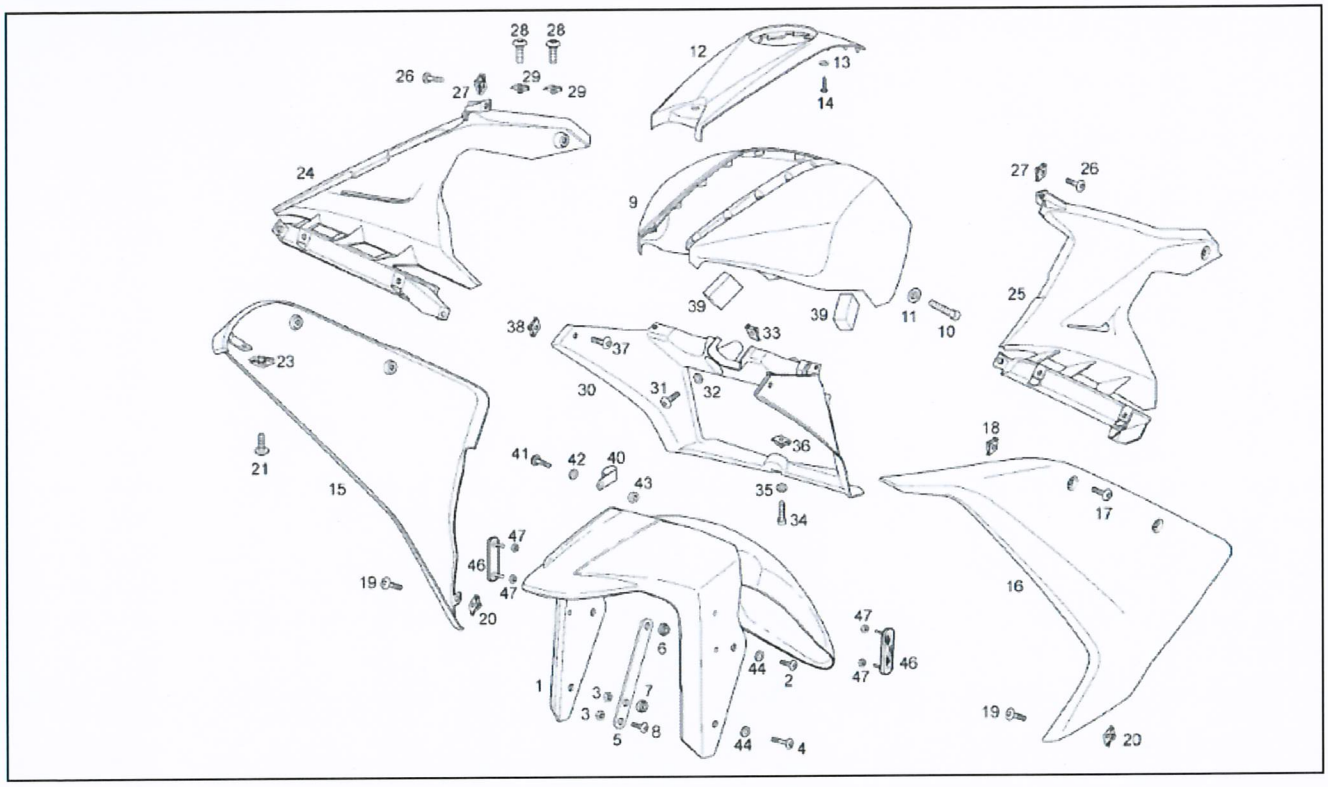

FILTERS: none

Pos.	Code	Description	Q.ty	Variants
29	AP8102375	Clip m5	1	
30	865945	Baffle	1	
31	AP8150044	Hex socket screw M6x20	1	
32	00402060001	Washer D6 DIN125 AZNB	1	
33	254485	Spring plate M6	1	
34	896174	Hex socket screw Black M5x12	1	
35	AP8150501	Washer	1	
36	00G04401462	Nut D5	1	
37	AP8152339	Screw w/ flange M5x9	1	
38	AP8102375	Clip m5	1	
39	AP8117073	Adhesive sponge	2	
40	AP8101890	Black hose D8	1	
41	AP8152272	Screw w/ flange M5x12	1	
42	AP8150177	Washer 5,3X10X1	1	
43	AP8152306	Self-locking nut m5	1	
44	AP8150179	Washer 6,6x18*	1	
46	AP8124719	Reflector, amber	1	
47	AP8150204	Nut M4	1	

Assembly	Tables
Code	23
Description	Carburettor
Review	1

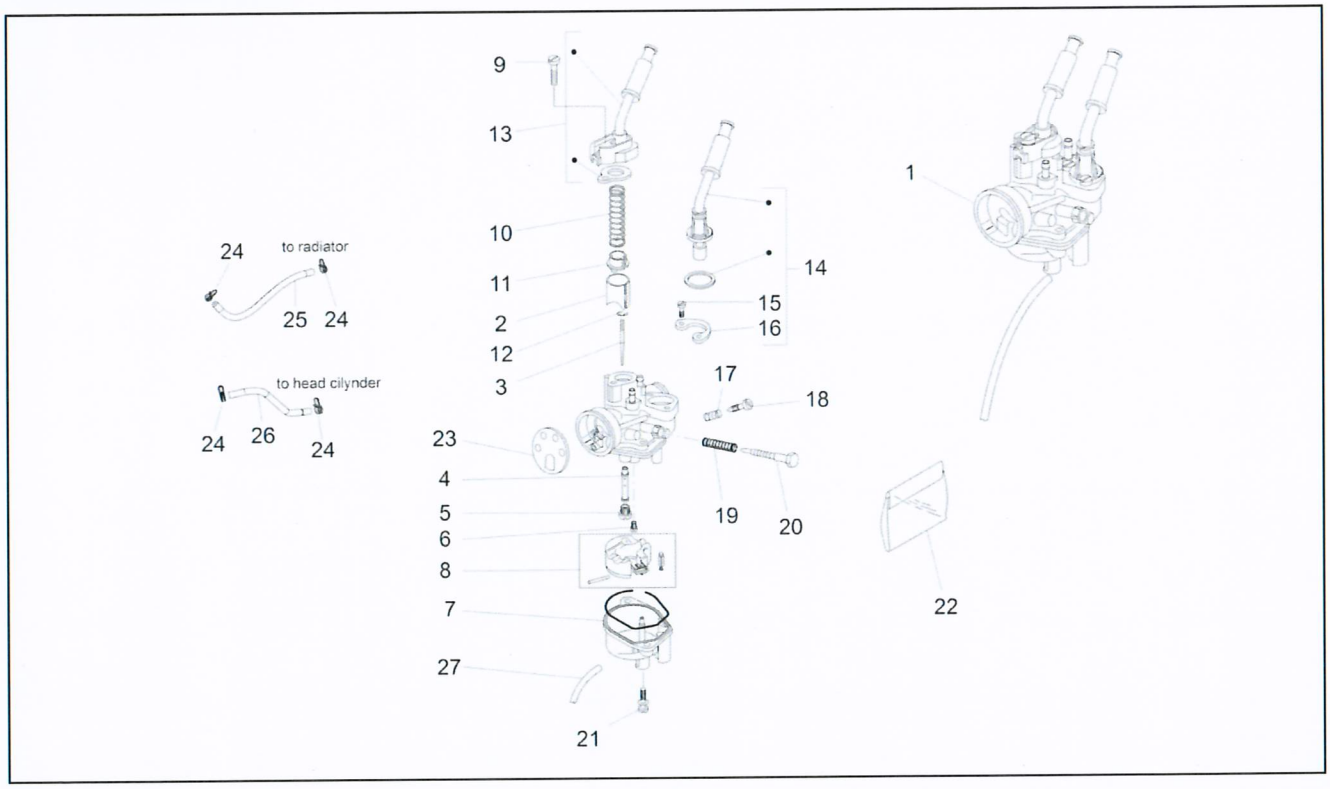

FILTERS: none

Pos.	Code	Description	Q.ty	Variants
1	CM152713	Carburetor assembly	1	
2	CM141711	Gas valve	1	
3	CM107506	Conical pin	1	Start date: 2011-03-16 Technical specification: Switzerland [CH]
3	CM107503	Conical pin A8	1	Start date: 2011-03-25 AP6111100ECB01|AP6111100EAB01|AP6111100EBB02
4	CM106218	Diffuser 209 GA	1	Start date: 2011-03-16 Technical specification: Switzerland [CH]
4	CM106233	Diffuser 208 HM	1	Start date: 2011-03-25
5	CM101752	Main jet 108	1	Start date: 2011-03-16 Technical specification: Switzerland [CH]
5	CM101719	Main jet 68	1	Start date: 2011-03-25 AP6111200EBB01
6	CM102103	Idle jet	1	
6	CM102101	Idle jet 30	1	Start date: 2011-03-16 Technical specification: Switzerland [CH]
7	484704	Complete reservoir	1	
8	288882	Float	1	
9	288865	screw	1	
10	482942	Gas valve spring	1	
11	288873	Conical pin clip	1	
12	288872	Ring	1	
13	431654	Gas valve cover	1	
14	CM146204	Starter	1	
15	289575	screw	2	
16	288863	Plate	1	
17	085285	Spring	1	
18	CM107701	Air adjuster screw	1	

Assembly	Tables
Code	23
Description	Carburettor
Review	1

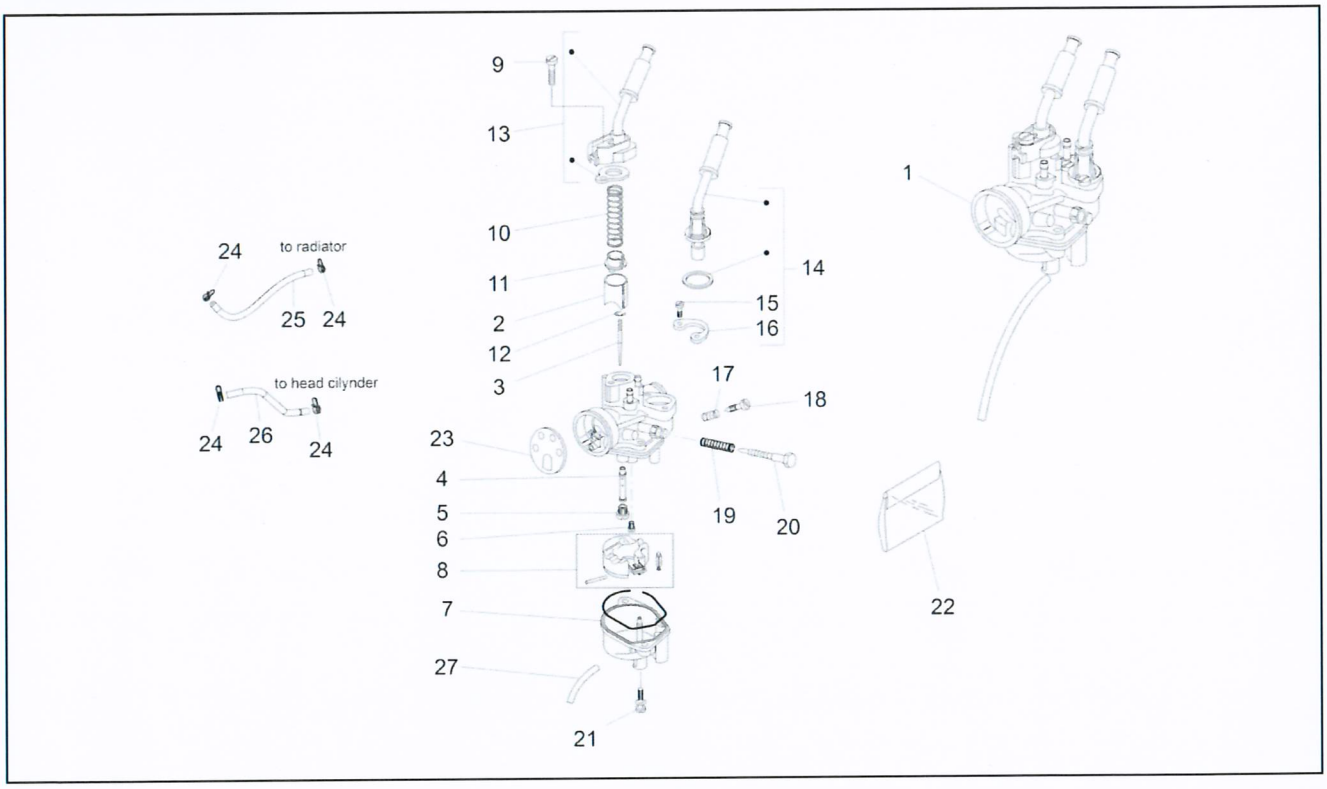

FILTERS: none

Pos.	Code	Description	Q.ty	Variants
19	152608	Spring	1	
20	828074	Gas valve adjuster screw	1	
21	288862	Float chamber fixing screw	2	
22	00H04103771	Gasket envelope	1	
23	827892	Air gauger	1	
24	CM002901	Hose clamp	4	
25	CM200429	Fuel pipe	1	
26	00H03801961	Water pipe	1	
27	CM112001	Float chamber dump pipe L=130	1	

Assembly	Tables
Code	22
Description	Carters
Review	1

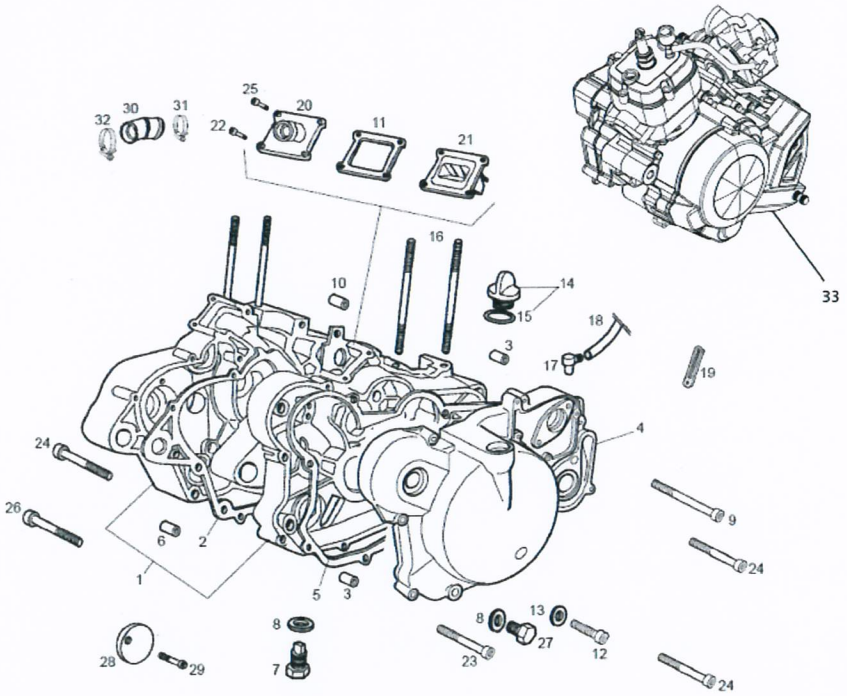

FILTERS: none

Pos.	Code	Description	Q.ty	Variants
1	CM1503105	Crankcase assy	1	
2	B015311	Gasket	1	
3	847241	Pin	1	
4	CM1507044	Clutch cover	1	
5	880888	Cover gasket	1	
6	847097	Locating dowel	1	
7	847237	screw	1	
8	847238	Washer	1	
9	CM149801	screw 6M100X55	1	
10	847023	Ring nut	1	
11	847091	Gasket	1	
12	319446	Hex socket screw M6x10	1	
13	847239	Washer	1	
14	847087	screw	1	
15	847180	O-ring	1	
16	877264	Stud bolt L=109 mm	1	
17	847024	Joint	1	
18	00H03711461	pipe	1	
19	00G03702181	Plate	1	
20	847093	Intake manifold	1	
21	873815	Reed valve assy	1	
22	844155	Sec. screw M6x25	1	
23	414838	screw M6x35	1	
24	B016763	Screw w/ flange M6x40	1	
25	828152	screw M6x22	1	
26	AP9100433	Screw w/ flange M6x50	1	
27	847174	screw	1	

Assembly	Tables
Code	22
Description	Carters
Review	1

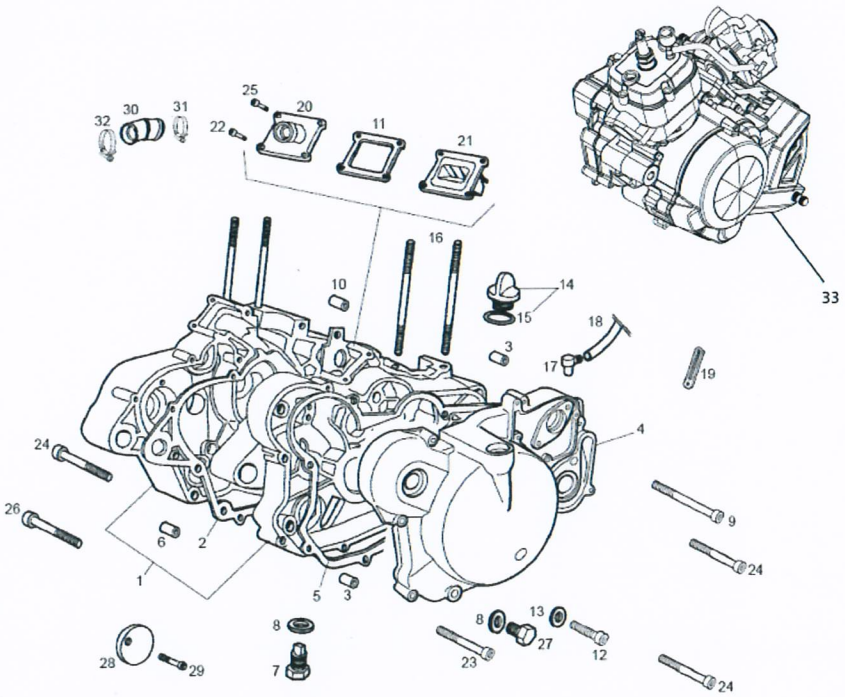

FILTERS: none

Pos.	Code	Description	Q.ty	Variants
28	848019	Plate	1	
29	B013529	Screw w/ flange	1	
30	871319	Hose	1	
31	847096	Hose clamp	1	
32	AP8104097	Hose clamp	1	
33	CM1513105	Engine cpl.	1	

Assembly	Tables
Code	24
Description	Cdi magneto assy
Review	1

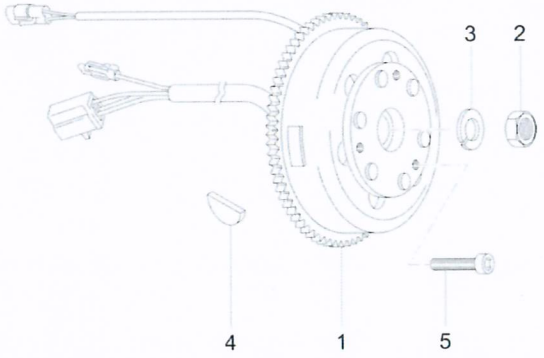

FILTERS: none

Pos.	Code	Description	Q.ty	Variants
1	82852R	Cdi magneto assy	1	
2	847235	Nut	1	
3	847234	Washer	1	
4	847215	Transmission key	1	
5	B014598	Torx Screw M5x12	1	

Assembly	Tables
Code	18
Description	Clutch
Review	1

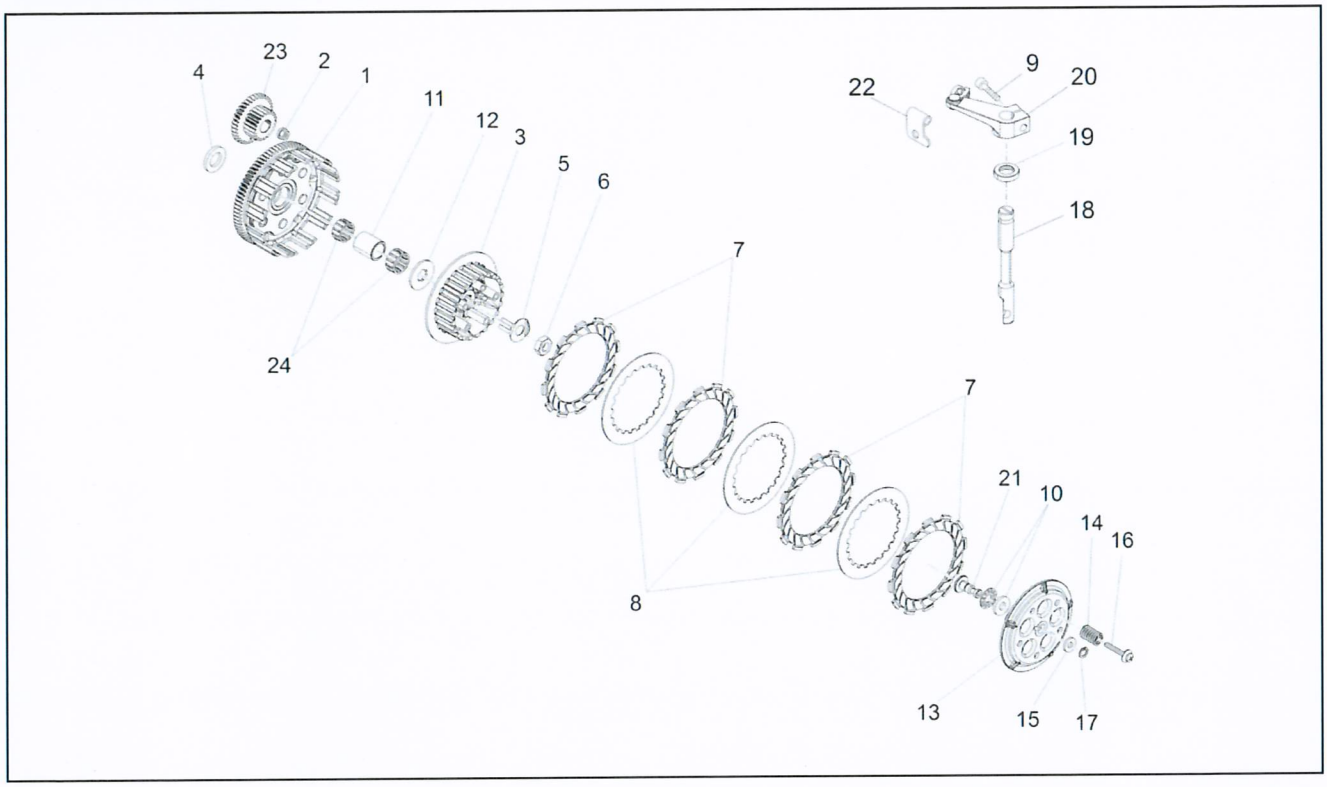

FILTERS: none

Pos.	Code	Description	Q.ty	Variants
1	B017378	Clutch gearing	1	
2	847217	Nut 10M100	1	
3	847045	Clutch pressure plate	1	
4	847218	Washer	1	
5	876418	Washer	1	
6	847221	Nut	1	
7	847043	Driven clutch disc	1	
8	847044	Driving clutch disc	1	
9	623920	screw torx	1	
10	847222	Bearing	1	
11	B016310	Spacer	1	
12	847042	Washer	1	
13	847046	Clutch collar	1	
14	847047	Spring	1	
15	847224	Washer	1	
16	847048	screw 5M80X35	1	
17	006410	Gasket ring	1	
18	847083	Clutch lever	1	
19	847075	Oil seal 12x20	1	
20	CM151201	Clutch relese shaft	1	
21	847223	Pin	1	
22	847090	Plate	1	
23	8470395	Engine Gear cpl.	1	
24	871316	Roller cage 22x26x13	2	

Assembly	Tables
Code	21
Description	Counterweight
Review	1

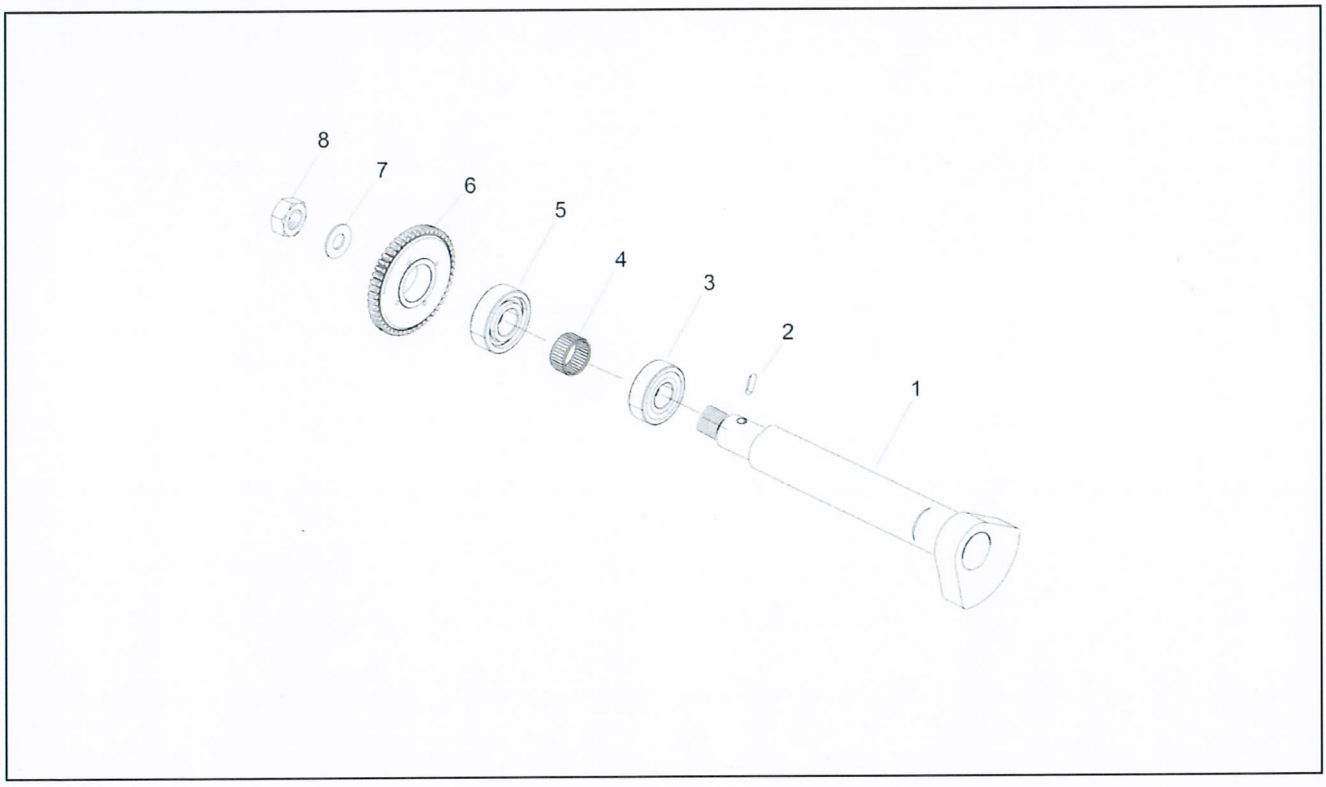

FILTERS: none

Pos.	Code	Description	Q.ty	Variants
1	847050	Counterweight	1	
2	847213	Piston pin 4X6	1	
3	847017	Gasket ring	1	
4	847013	Bearing	1	
5	00058120100	Bearing 12.32.10	1	
6	847049	Gear	1	
7	847276	Washer	1	
8	847275	Nut	1	

Assembly	Tables
Code	17
Description	Cylinder - Piston
Review	1

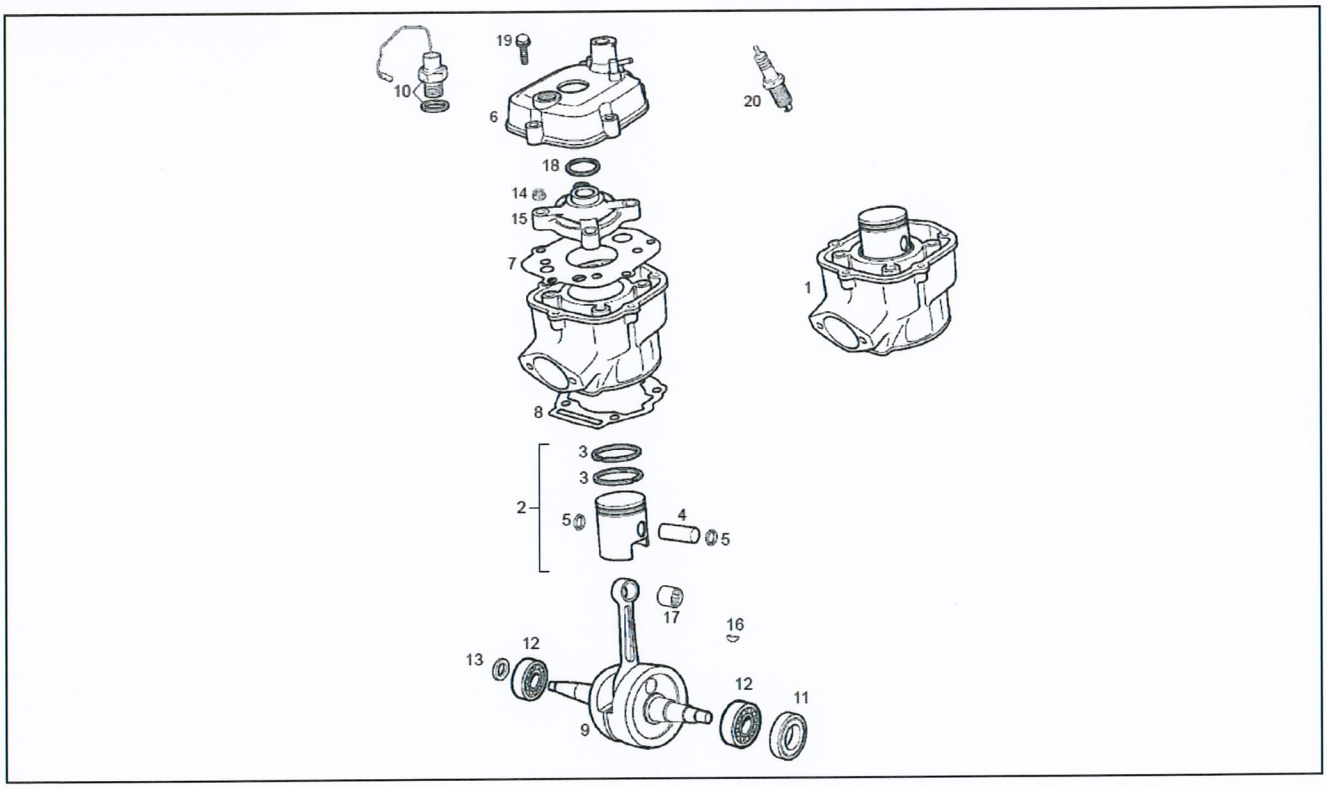

FILTERS: none

Pos.	Code	Description	Q.ty	Variants
1	8777005	Cylinder with piston	1	
2	8770700001	Piston assy A-V/FE	1	
2	8770700002	Piston assy B-V/FE	1	
2	8770700004	Piston assy D-V/FE	1	
2	8770700003	Piston assy C-V/FE	1	
3	877072	Ring	1	
4	847012	Piston pin	1	
5	878519	Stop ring	1	
6	CM1519014	Head cover	1	
7	871725	Cylinder head gasket	1	
8	CM159502	Gasket V/AL 0,5	1	
8	CM159501	Gasket V/FE 0,3	1	
8	CM159503	Gasket V/FE 0,7	1	
9	874224	Drive shaft	1	
10	880325	Temperature gauge	1	
11	847020	Oil seal	1	
12	847172	Bearing	1	
13	847020	Oil seal	1	
14	436947	Nut	1	
15	8470084	Cylinder head	1	
16	847215	Transmission key	1	
17	847529	Cage	1	
18	847007	Cylinder head gasket	1	
19	844155	Sec. screw M6x25	1	
20	861612	Spark plug NGK BR8ES	1	

Assembly	Tables
Code	31
Description	decals
Review	1

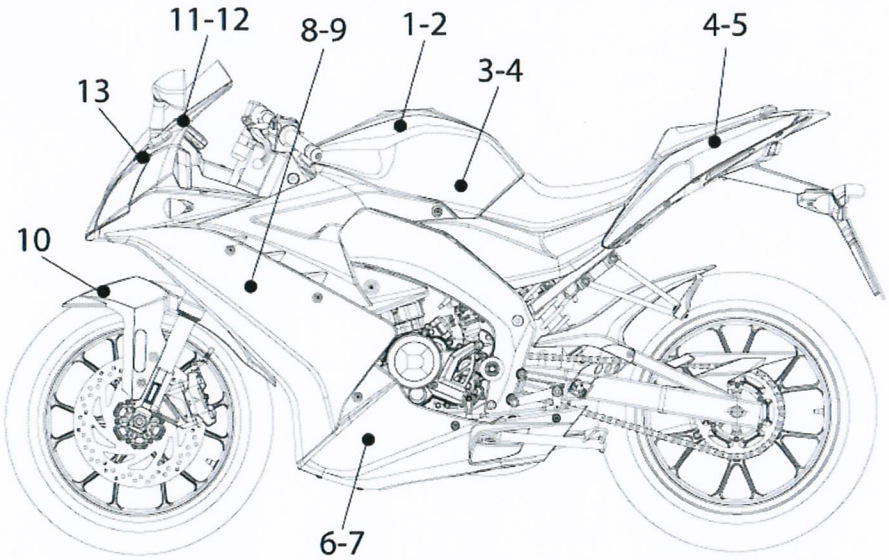

FILTERS: none

Pos.	Code	Description	Q.ty	Variants
1	B046173	Right tank decal DERBI	1	
2	B046174	Fuel tank decal DERBI	1	
3	B046175	RH Fuel tank decal	1	
4	B046181	RH rear fairing decal "GPR"	0	
4	B046176	LH Fuel tank decal	1	
5	B046182	LH rear fairing decal "GPR"	1	
6	B046179	RH lower fairing decal "derbi"	0	
7	B046180	LH Lowerr fairing decal "derbi"	1	
8	B046178	RH fairing decal "D GPR"	0	
9	B046177	LH fairing decal "D GPR"	1	
10	B046172	Front mudguard decal "D"	1	
11	B046169	Transfer centre black	1	
12	B046170	Transfer centre black	1	
13	B046171	LH Front fairing decal "GPR"	1	

Assembly	Tables
Code	10
Description	Electrical system
Review	1

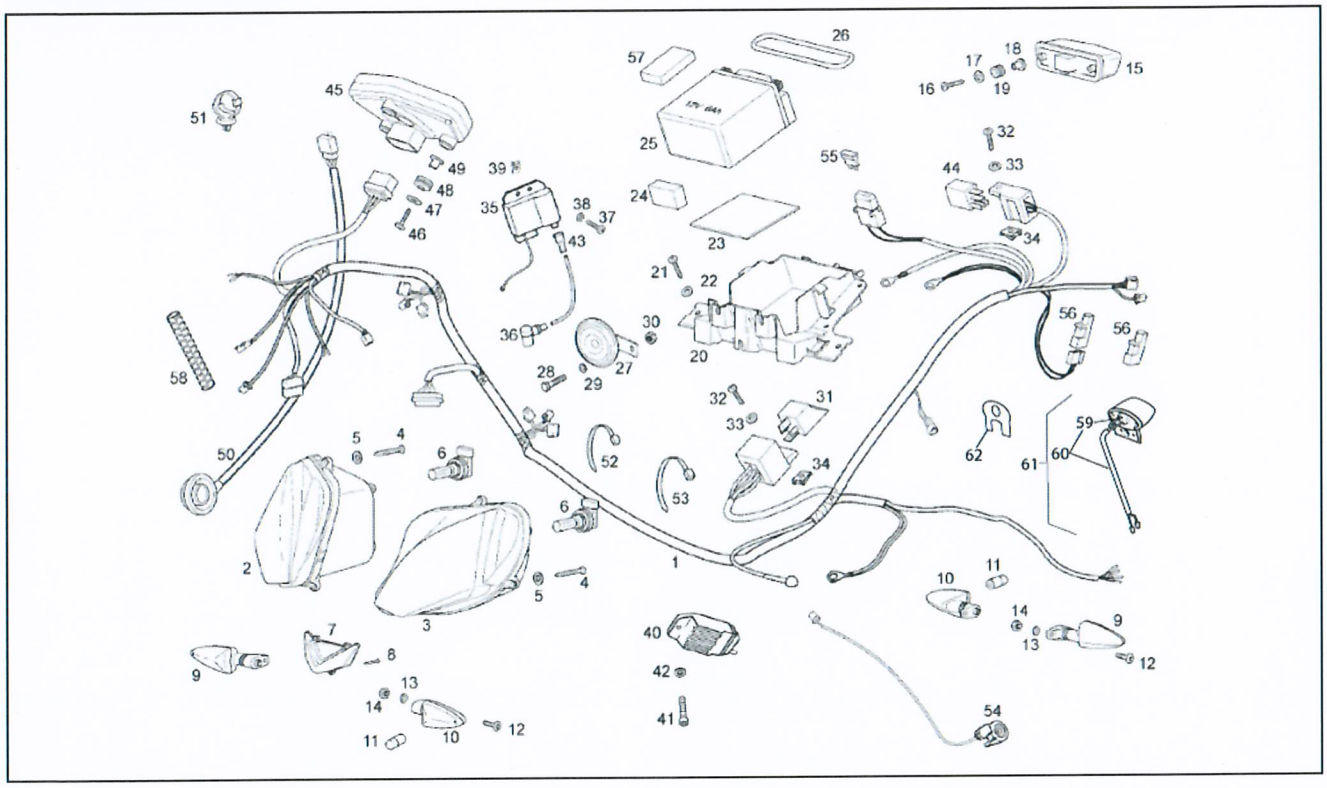

FILTERS: none

Pos.	Code	Description	Q.ty	Variants
1	866067	Main wiring harness	1	
2	866068	RH headlight	1	
3	866069	LH headlight	1	
4	AP8221242	Spec. self-tap screw 3,5x20	1	
5	AP8150177	Washer 5,3X10X1	1	
6	580734	Lamp 12V-35W H8	1	
7	866300	Front daylight running light glass	1	
8	00011030900	Self tapping screw 3,5x9,5	1	
9	890214	Rear LH turn indicator	1	
10	890213	Rear RH turn indicator	1	
11	00H01701011	Lamp	1	
12	AP8224470	Hex socket screw M6x20	1	
13	AP8150179	Washer 6,6x18*	1	
14	AP8152299	Self-locking nut M6	1	
15	865634	Tail lamp	1	
16	AP8152351	Screw 4,2x16*	1	
17	AP8150501	Washer	1	
18	864461	Spacer bush	1	
19	00D01010821	Silent-block	1	
20	866007	Battery box	1	
21	AP8150246	Screw	1	
22	AP8150248	Washer 5,5x15x1,6	1	
23	AP8144553	Support rubber part	1	
24	00H01803471	Vibration-damping rubber	1	
25	292330	Yuasa battery 12V-4Ah	1	
26	00G01802361	O-ring	1	
27	86135R	Horn	1	

Assembly	Tables
Code	10
Description	Electrical system
Review	1

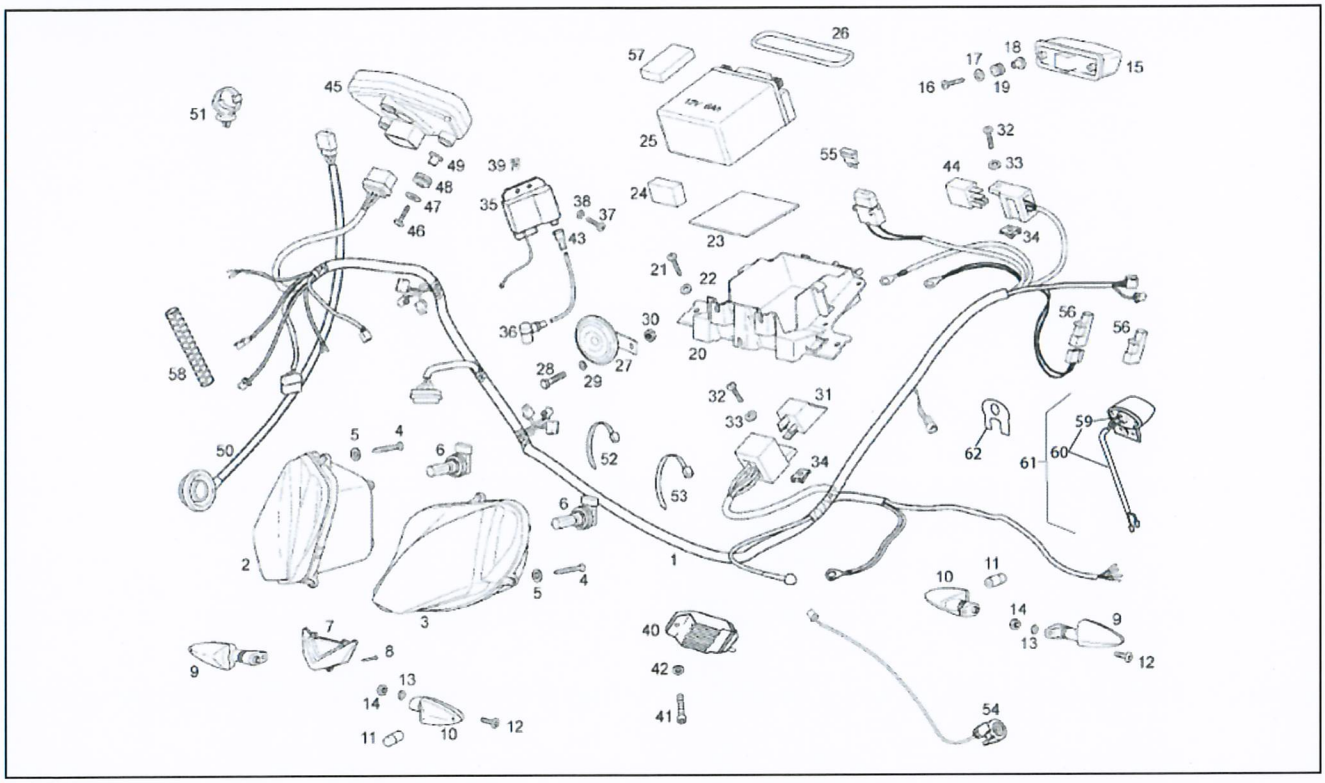

FILTERS: none

Pos.	Code	Description	Q.ty	Variants
28	AP8152285	Screw w/ flange	1	
29	AP8150376	Washer 8,5x15x0,8	1	
30	AP8152300	Self-locking nut M8	1	
31	584521	Rem. control switch 12V-80A	1	
32	AP8152272	Screw w/ flange M5x12	1	
33	00031105000	Washer D5	1	
34	AP8102375	Clip m5	1	
35	897642	Ignition electronical device	1	
36	00G03301271	Sparkplug cap	1	
37	00002062011	screw M6x20	1	
38	00402060001	Washer D6 DIN125 AZNB	1	
39	254485	Spring plate M6	1	
40	898891	Voltage regulator	1	
41	AP8150137	Hex socket screw M6x16	1	
42	AP8150012	Washer 5,3x10x1*	1	
43	00G03301731	Cap	1	
44	864506	Relay	1	
45	866072	Dashboard	1	
46	AP8152329	Phillips screw, SWP M5x20	1	
47	AP8150248	Washer 5,5x15x1,6	1	
48	00D01010821	Silent-block	1	
49	864461	Spacer bush	1	
50	898626	Wheel speed sensor	1	
51	AP8120582	Cable-guide	1	
52	AP8120416	Black hose 178x4	1	
53	AP8120657	Hose clamp	1	
54	00N05700601	Switch	1	

Assembly	Tables
Code	10
Description	Electrical system
Review	1

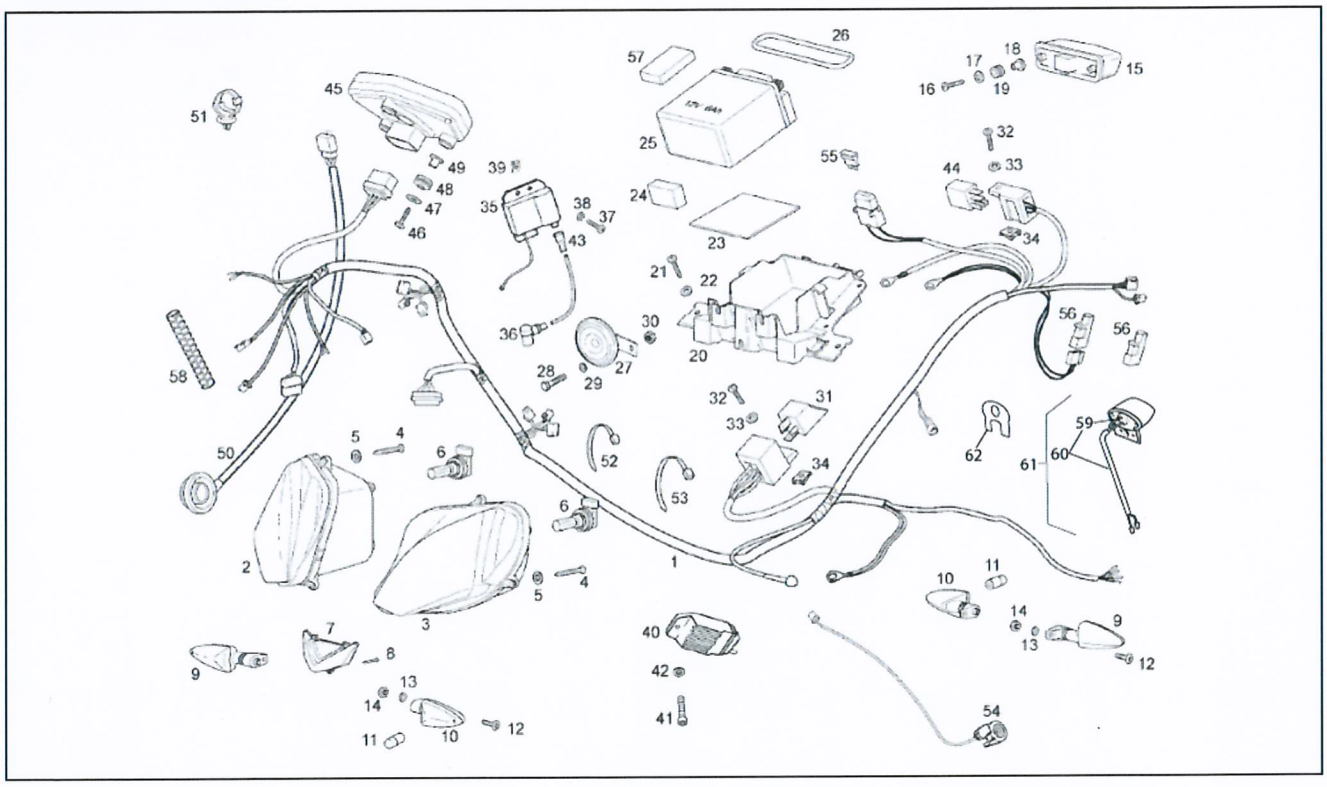

FILTERS: none

Pos.	Code	Description	Q.ty	Variants
55	00H01000911	Fuse 7,5A	1	
56	864565	Diode	1	
57	AP8117003	Adhesive sponge 15X5	1	
58	CM201402	Pipe cover	1	
59	00G05701471	Number-plate light	1	Technical specification: Switzerland [CH]
60	00G02300581	Lampholder	1	Technical specification: Switzerland [CH]
61	00G05701471	Number-plate light	1	Technical specification: Switzerland [CH]
62	AP8117258	Vibration-damping rubber	1	Technical specification: Switzerland [CH]

Assembly	Tables
Code	14
Description	Exhaust pipe
Review	1

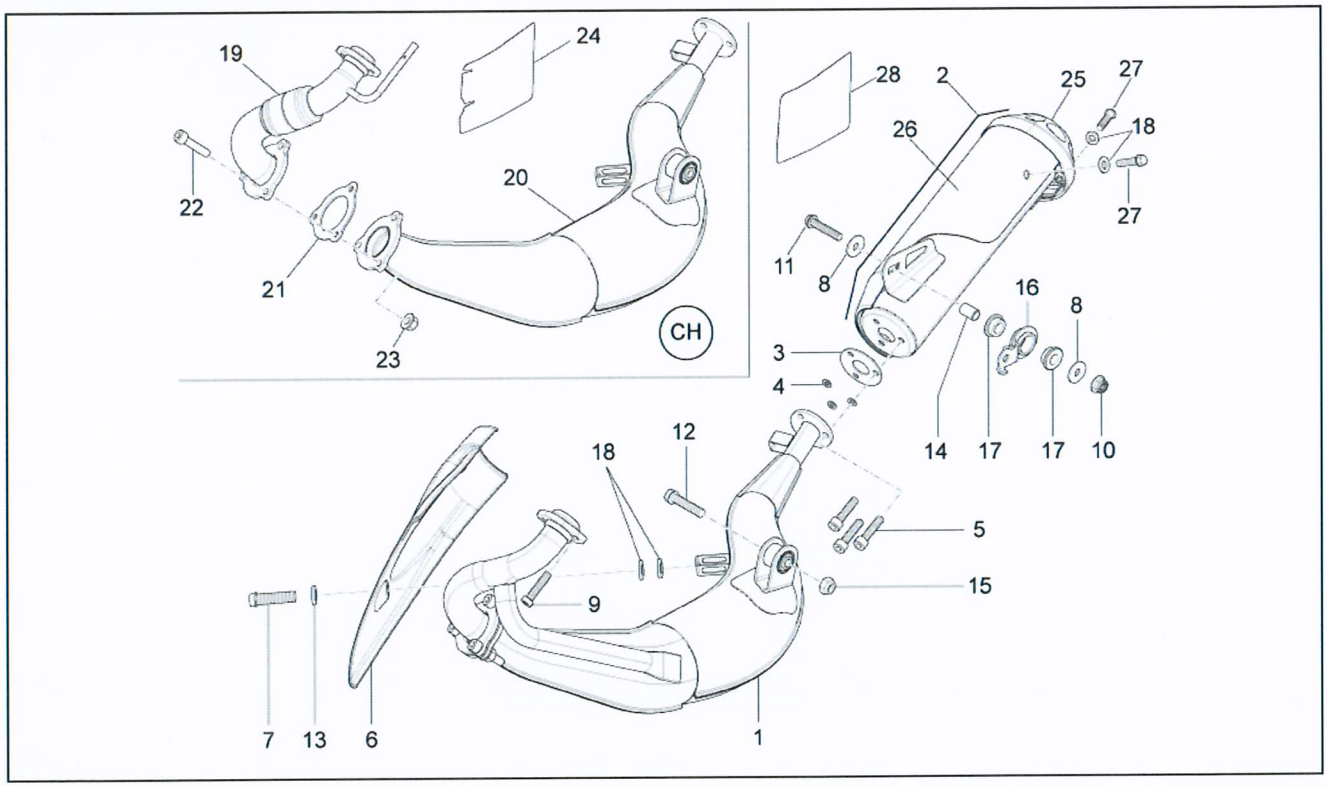

FILTERS: none

Pos.	Code	Description	Q.ty	Variants
1	B043500	Silencer	1	
2	866721	Silencer	1	
3	866661	Exhaust pipe gasket	1	
4	00402060001	Washer D6 DIN125 AZNB	3	
5	00002062011	screw M6x20	3	
6	86630100W5G	Exhaust pipe front prot.	1	
7	AP8152273	Screw w/ flange M5x15	2	
8	AP8150018	Washer	2	
9	AP8150044	Hex socket screw M6x20	2	
10	AP8152300	Self-locking nut M8	1	
11	AP8152290	Screw w/ flange M8x40	1	
12	AP8152292	Screw w/ flange	1	
13	AP8150013	Washer 5,5x15x1,6*	2	
14	AP8121455	Spacer bush	1	
15	AP8152300	Self-locking nut M8	2	
16	B043545	Silencer support	1	
17	AP8144558	Rubber spacer	2	
18	00F04201361	Washer	16	
19	867227	Tubo scarico anteriore	1	Technical specification: Switzerland [CH]
20	867224	Silencer	1	Technical specification: Switzerland [CH]
21	865093	Gasket	1	Technical specification: Switzerland [CH]
22	00000004615	Hex socket screw 6x16	3	Technical specification: Switzerland [CH]
23	00026006001	Nut	3	Technical specification: Switzerland [CH]
24	867277	Heat protection	1	Technical specification: Switzerland [CH]
25	866728	Exhaust pipe trailing	1	Stop date: 2010-11-19 AP6111100EAB01|AP6111100EBB02|AP6111100EBB03| AP6111100ECB01|AP6111100ECB03
26	866727	Silencer protection	1	Start date: 2011-02-15

Assembly	Tables
Code	14
Description	Exhaust pipe
Review	1

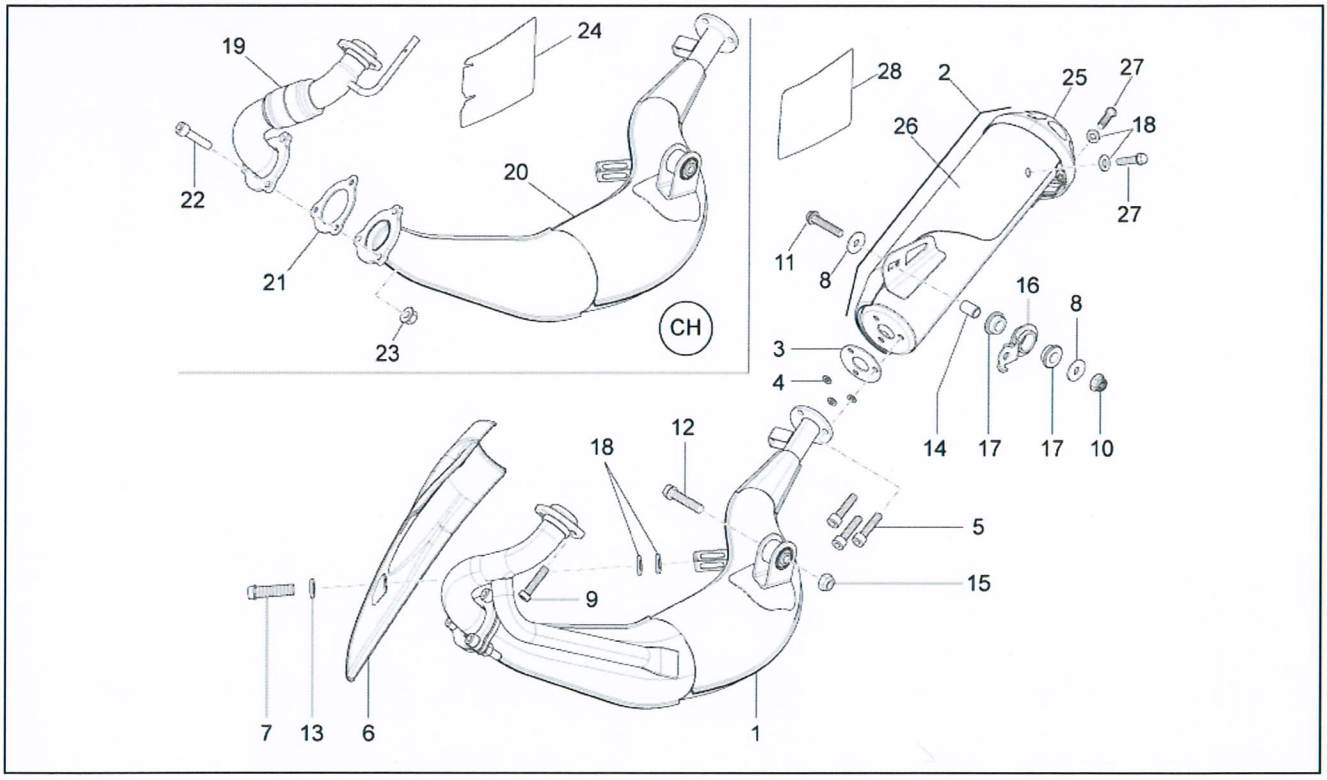

FILTERS: none

Pos.	Code	Description	Q.ty	Variants
				AP6111100EAB01|AP6111100EBB02|AP6111100EBB03|AP6111100ECB01|AP6111100ECB03
27	864201	screw	6	Start date: 2011-02-15 AP6111100EAB01|AP6111100EBB02|AP6111100EBB03|AP6111100ECB01|AP6111100ECB03
28	866751	Heat protection	1	Start date: 2011-02-15 AP6111100EAB01|AP6111100EBB02|AP6111100EBB03|AP6111100ECB01|AP6111100ECB03

Assembly	Tables
Code	01
Description	Frame
Review	1

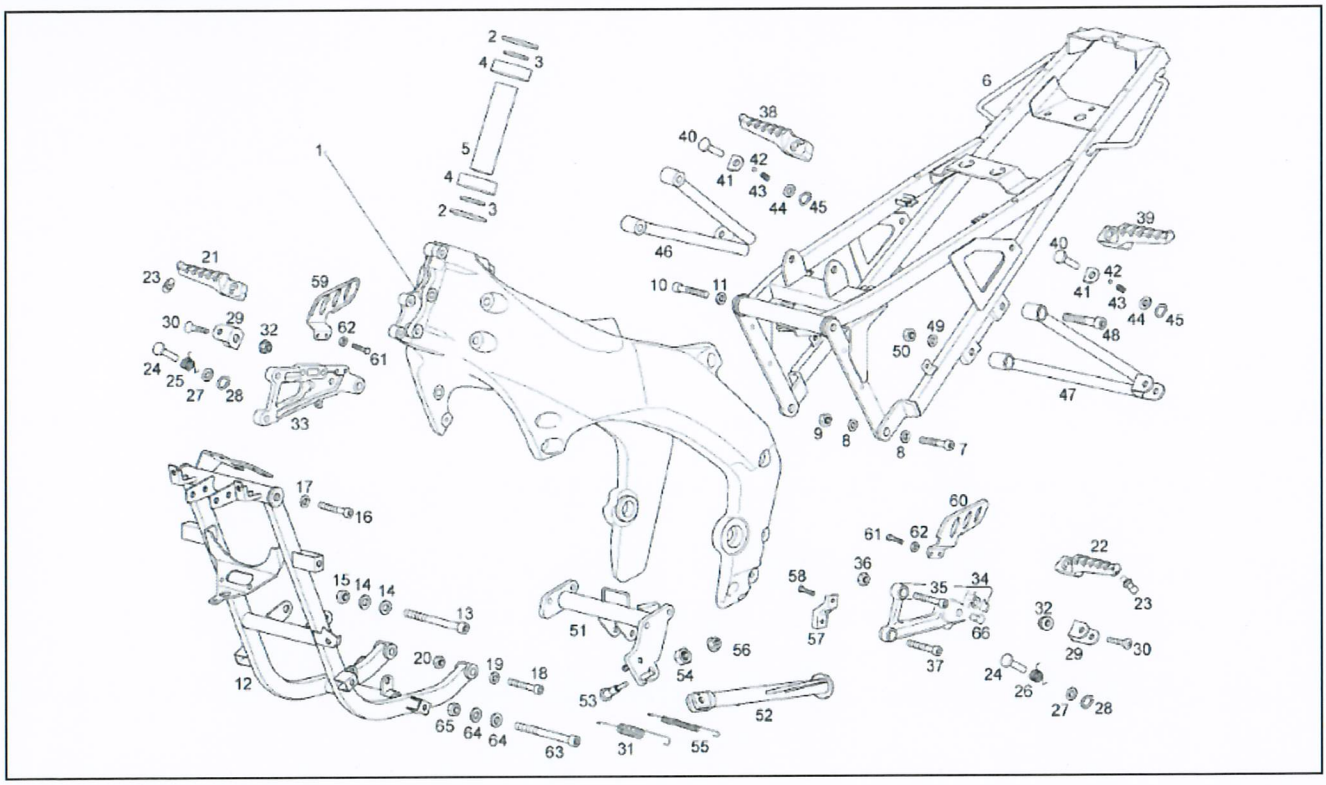

FILTERS: none

Pos.	Code	Description	Q.ty	Variants
1	898055000WN6	Frame, black	1	
2	AP8104597	Gasket ring	1	
3	AP8203550	Steering washer	1	
4	AP8110093	Bearing 6205-2rs1 25x52x15	1	
5	865666	Tube	1	
6	86562301WN6	Saddle support	1	
7	00004114500	Hex socket screw	1	
8	AP8150020	Washer 10,5x21x2*	1	
9	002440	Self locking nut M10	1	
10	AP8150171	Hex socket screw M8x40	1	
11	AP8150376	Washer 8,5x15x0,8	1	
12	86606401WN6	Cradle	1	
13	00H03000272	screw 10M150X100	1	
14	AP8150020	Washer 10,5x21x2*	1	
15	002440	Self locking nut M10	1	
16	AP8150038	Hex socket screw M10x45	1	
17	AP8150020	Washer 10,5x21x2*	1	
18	00000004860	Allen wrench M8x60	1	
19	AP8150376	Washer 8,5x15x0,8	1	
20	00026008001	Nut 8M125	1	
21	AP8132957	RH Foot rests	1	
22	AP8132958	LH Foot rests	1	
23	AP8121134	Footrest pin	1	
24	CM228402	Footrest pin	1	
25	AP8121939	RH front footrest spring	1	
26	AP8121940	LH front footrest spring	1	
27	00003515370	Washer	1	

Assembly	Tables
Code	01
Description	Frame
Review	1

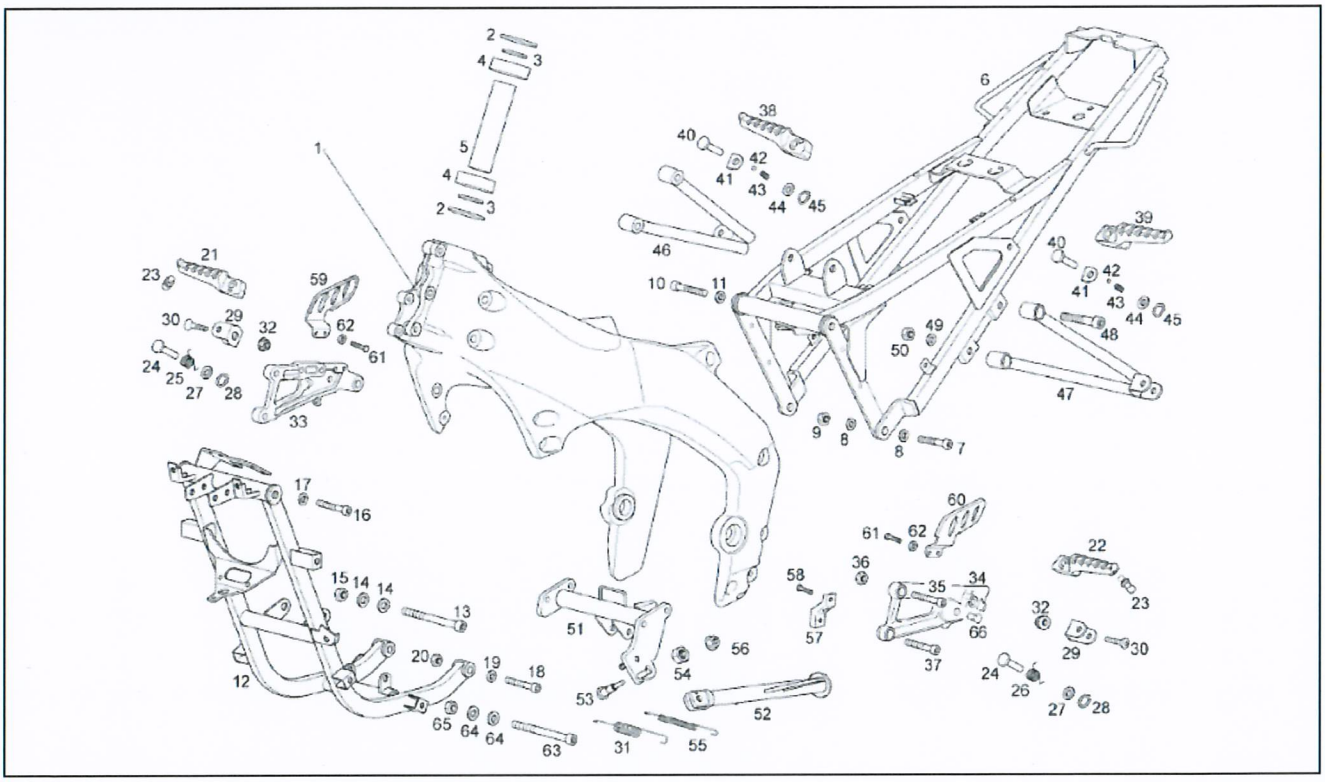

FILTERS: none

Pos.	Code	Description	Q.ty	Variants
28	006408	Safety washer	1	
29	866215	Fork	1	
30	AP8152196	Screw M8x26	1	
31	AP8221204	Lateral stand spring	1	
32	00026008001	Nut 8M125	1	
33	866138	RH front footrest bracket	1	
34	866139	LH front footrest bracket	1	
35	AP8150170	Hex socket screw M8x25	1	
36	AP8150115	Low self-locking nut M6	1	
37	AP8150236	Hex socket screw M8x35	1	
38	AP8146864	Rear footrest, RH	1	
39	AP8146865	Rear footrest, LH	1	
40	CM228402	Footrest pin	1	
41	866464	Plate	1	
42	AP8101861	Ball D6,35	1	
43	AP8121133	Coil compress. spring	1	
44	00003515370	Washer	1	
45	847182	Safety washer D8	1	
46	86565101WN6	RH footrest support	1	
47	86565201WN6	LH footrest support	1	
48	AP8150107	Hex socket screw M8x30	1	
49	AP8150376	Washer 8,5x15x0,8	1	
50	AP8150115	Low self-locking nut M6	1	
51	865626	Stand support	1	
52	86561601WN6	Lateral stand	1	
53	865617	Side stand fixing screw	1	
54	865618	Nut M10x1,25	1	

Assembly	Tables
Code	01
Description	Frame
Review	1

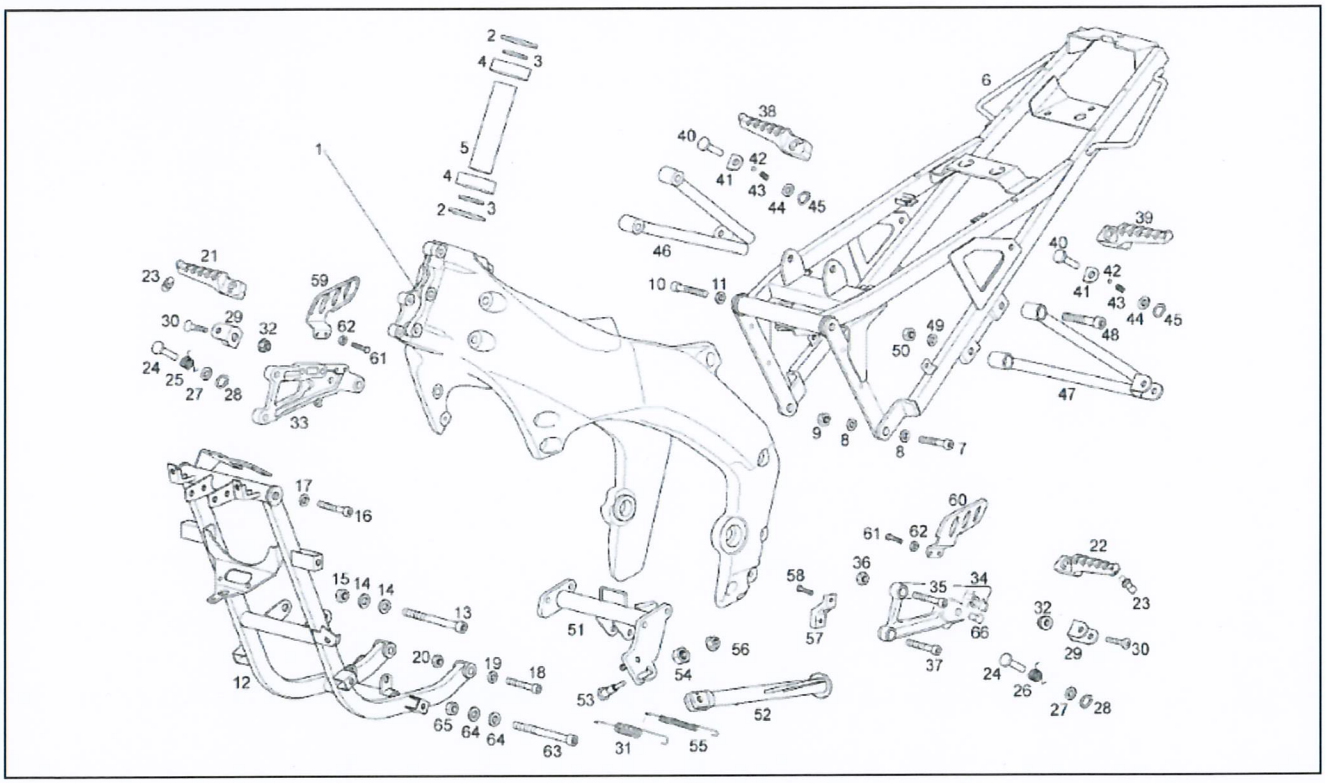

FILTERS: none

Pos.	Code	Description	Q.ty	Variants
55	AP8221211	Internal lateral stand spring	1	
56	AP8152299	Self-locking nut M6	1	
57	866012	Fairing fixing plate	1	
58	896174	Hex socket screw Black M5x12	1	
59	866141	RH front footrest guard	1	
60	866142	LH front footrest guard	1	
61	896174	Hex socket screw Black M5x12	1	
62	00031105000	Washer D5	1	
63	00H02500272	screw 8M125X90	1	
64	AP8150376	Washer 8,5x15x0,8	1	
65	AP8152300	Self-locking nut M8	1	
66	861302	Cover	1	

Assembly	Tables
Code	30
Description	Front Fork MinXing
Review	1

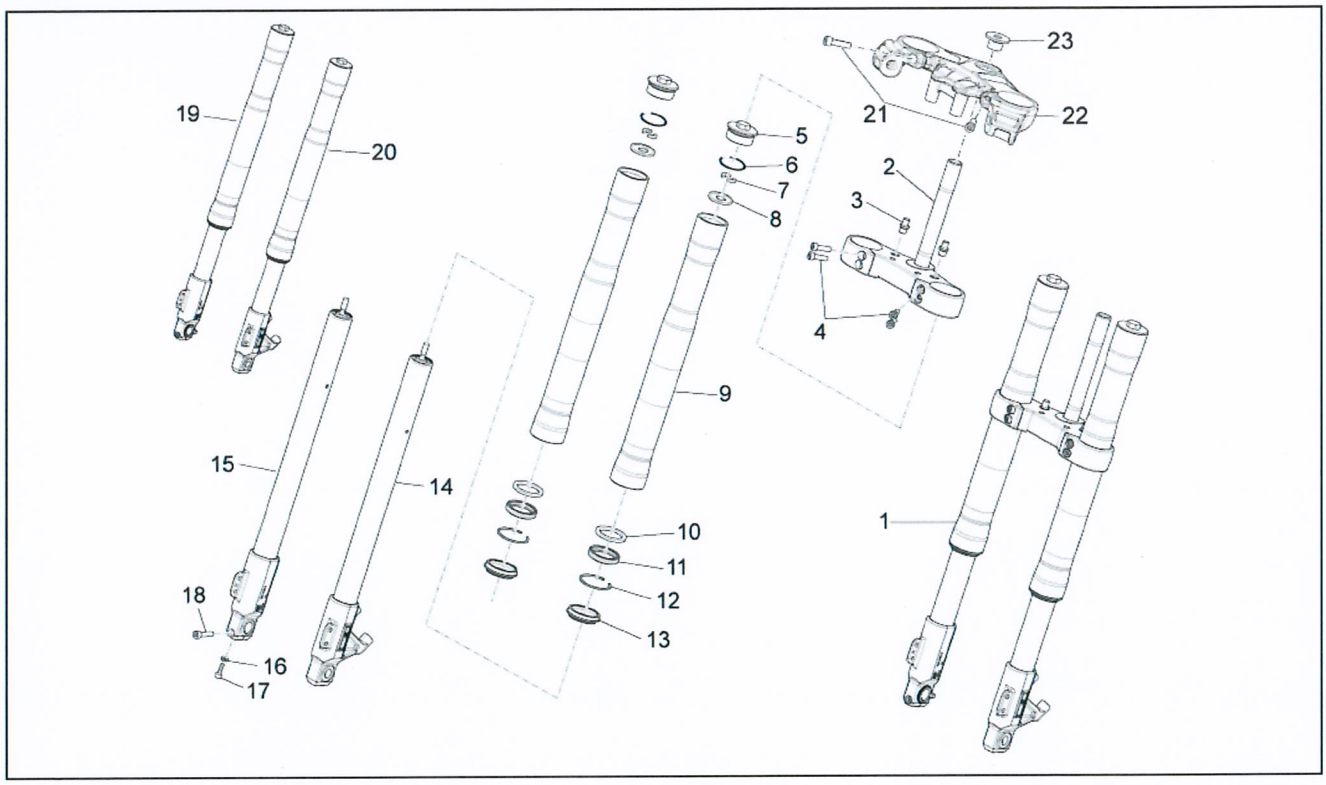

FILTERS: none

Pos.	Code	Description	Q.ty	Variants
1	8667100002	Front fork assembly MINXING	1	
2	B044047	Lower fork plate	1	
3	B044048	Limit stop	2	
4	AP8150236	Hex socket screw M8x35	4	
5	B044049	Fork tube cap	5	
6	B044050	O-ring	2	
7	B044051	Half ring	4	
8	B044052	Ring spring	2	
9	B044053	Sleeve	2	
10	B044054	Washer	2	
11	B044055	Oil seal	2	
12	B044056	Snap ring	2	
13	B044057	Dust cover	2	
14	B044058	LH hub	1	
15	B044059	RH hub	1	
16	B044060	Washer	1	
17	AP8150196	Hex socket screw	1	
18	AP8150107	Hex socket screw M8x30	1	
19	B044062	Sleeve cpl. DX	1	
20	B044061	Sleeve cpl. SX	1	
21	AP8150170	Hex socket screw M8x25	2	
22	865675	Upper plate	1	
23	865482	Nut	1	

Assembly	Tables
Code	02
Description	Front fork Paioli
Review	1

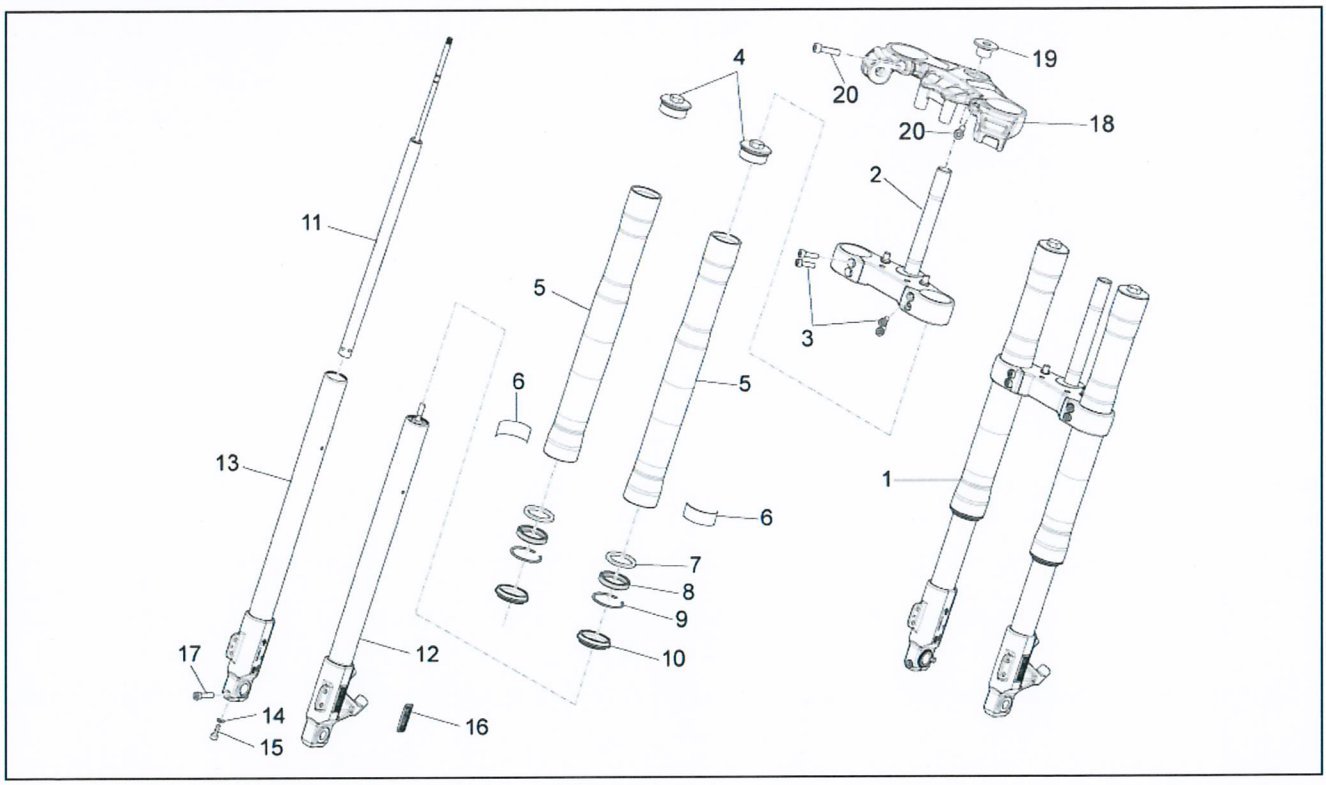

FILTERS: none

Pos.	Code	Description	Q.ty	Variants
1	8656650001	Front fork	1	
2	866766	Stem base	1	
3	AP8150107	Hex socket screw M8x30	4	
4	865471	Fork tube cap	2	
5	866770	Sleeve	2	
6	865475	Sleeve decal	2	
7	865466	Washer	2	
8	865467	Gasket ring	2	
9	865468	Snap ring	2	
10	865463	Dust cover	2	
11	866768	Plunger, complete	1	
12	866769	Hub+LH fork leg	1	
13	866767	Hub+RH fork leg	1	
14	863159	Washer	2	
15	865476	Special cap screw M10x40	2	
16	865465	Decal and plate set Paioli	2	
17	866779	Screw m6x20	2	
18	865675	Upper plate	1	
19	865482	Nut	1	
20	AP8150170	Hex socket screw M8x25	2	

Assembly	Tables
Code	11
Description	Front wheel
Review	1

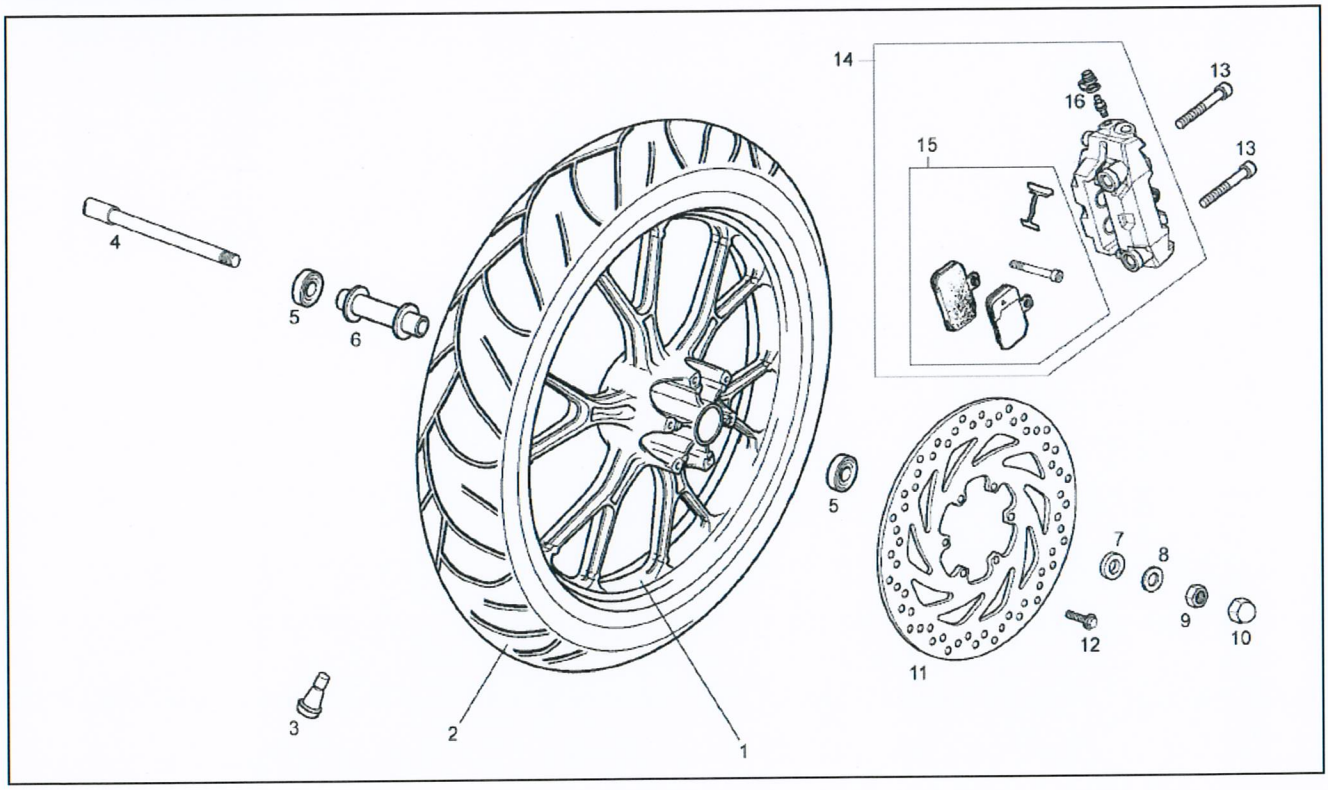

FILTERS: none

Pos.	Code	Description	Q.ty	Variants
1	00H01212841	Front wheel, black	1	
2	899857	Front/rear tyre 100/80-17" Michelin	1	
3	AP8201546	Tubeless tyre valve	1	
4	00H01205271	Front wheel spindle	1	
5	00058020200	Bearing	1	
6	00H01205031	Internal spacer	1	
7	00H01203291	Spacer	1	
8	00032015000	Washer	1	
9	00H00300672	Nut	1	
10	00H01201331	Guard	1	
11	866090	Front brake disc	1	
12	00H02402282	screw 6X20	1	
13	AP8150049	screw M10x60	1	
14	B044196	Front brake caliper	1	
15	B044202	Brake pads kit SBS S 60 HH	1	
15	B044201	Brake pads kit SBS SI 90 HH	1	
16	867240	Air bleed valve	1	

Assembly	Tables
Code	20
Description	Gear box
Review	1

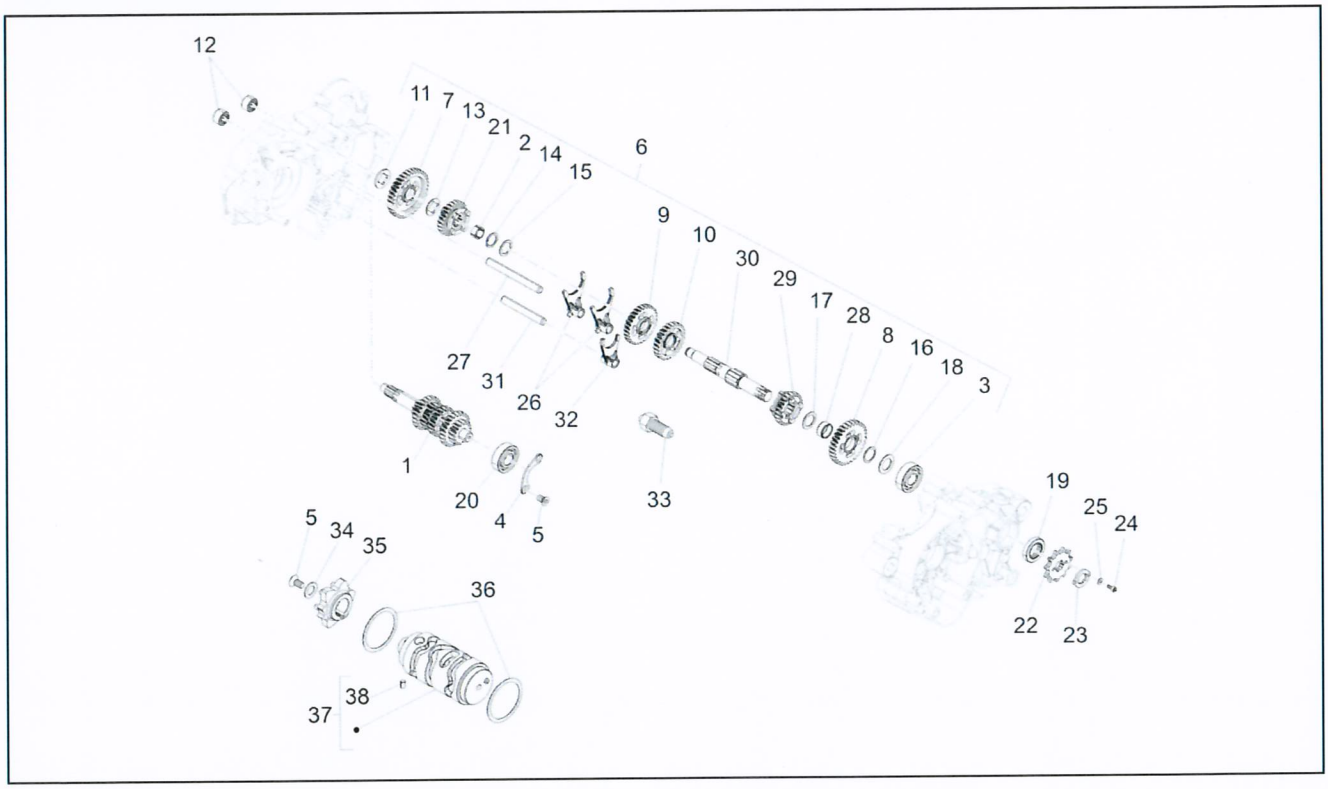

FILTERS: none

Pos.	Code	Description	Q.ty	Variants
1	847027	Primary gear shaft assy. 6 v.ta'	1	
2	847544	Roller cage	1	
3	847086	Bearing	1	
4	847021	Plate	1	
5	847210	screw	2	
6	847028	Secondary shaft cpl. 6 v.ta'	1	
7	847153	Gear 1A Z=34	1	
8	847157	Gear 2A Z=30	1	
9	847155	Gear 3A Z=27	1	
10	847156	Gear 4A Z=24	1	
11	847549	Washer	1	
12	847211	Roller cage	2	
13	871708	Shim washer	1	Start date: 2070-12-30
14	847542	Safety washer	1	
15	847548	Washer1x16x23.5	1	
16	847541	Washer 1x18x23	1	
17	847546	Shim washer 17,1x25x0,8	1	
18	847545	Washer 1.2x17x28	1	
19	847019	Oil seal	1	
20	847209	Bearing	1	
21	847154	Gear 5A Z=23	1	
22	00H02813371	Pinion Z=11	1	
22	00H02805371	Pinion Z=14	1	Technical specification: Switzerland [CH]
23	00H02800421	Plate	1	
23	00H02810421	Plate	1	Technical specification: Switzerland [CH]
24	00000004510	screw	2	Technical specification: Switzerland [CH]
24	AP8152043	Hex socket screw M4x10	2	

Assembly	Tables
Code	20
Description	Gear box
Review	1

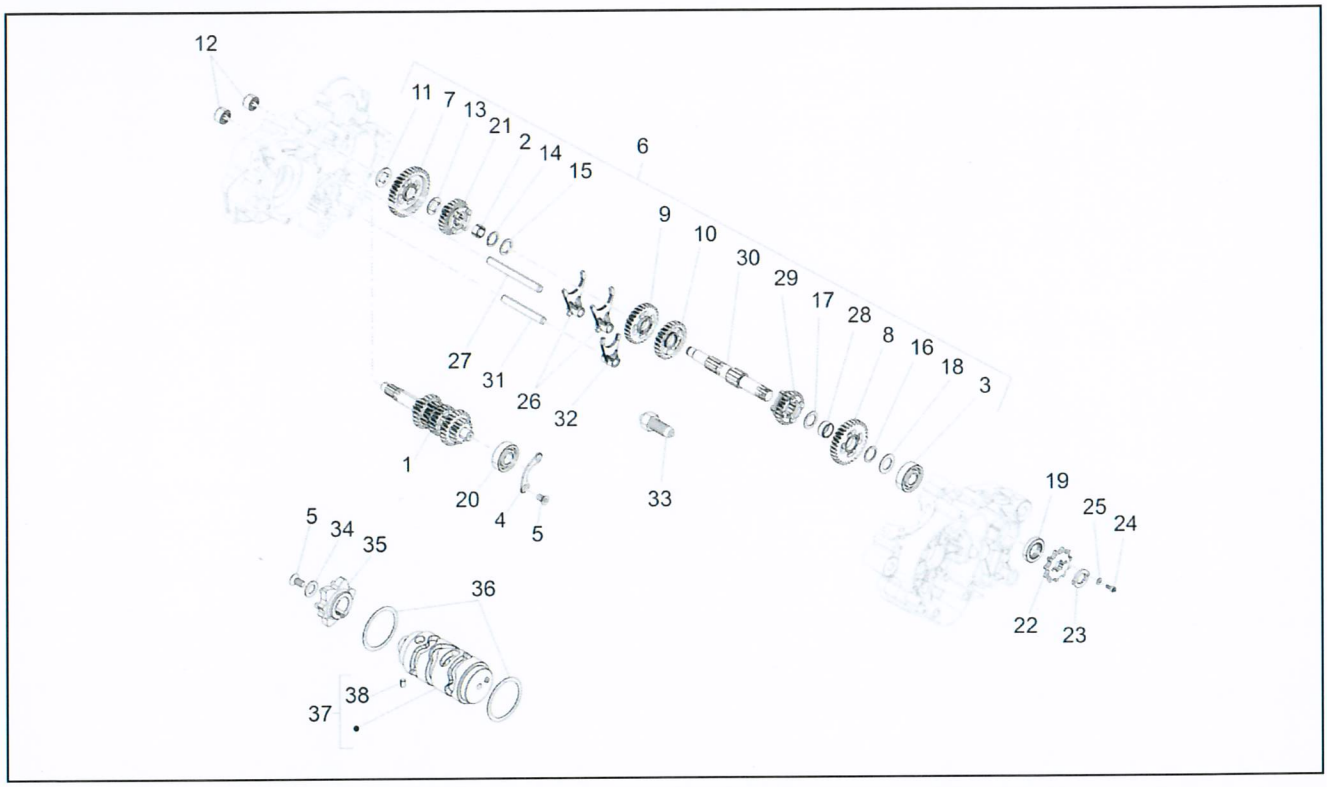

FILTERS: none

Pos.	Code	Description	Q.ty	Variants
25	AP8150535	Safety washer	2	
25	AP8150284	Ext. notched washer	2	Technical specification: Switzerland [CH]
26	847032	Fork	2	
27	847030	Fork guide pin w/shank	1	
28	847547	Bush	1	
29	847158	Gear 6A Z=22	1	
30	847159	Secondary gear shaft	1	
31	847029	Fork guide pin w/shank	1	
32	847031	Fork	1	
33	880095	Gear position sensor	1	Start date: 2011-04-20
34	847214	Washer	1	
35	847038	Shift cam plate	1	
36	847036	Washer	2	
37	847034	Shift cam	1	
38	847213	Piston pin 4X6	1	

Assembly	Tables
Code	09
Description	Handlebar
Review	1

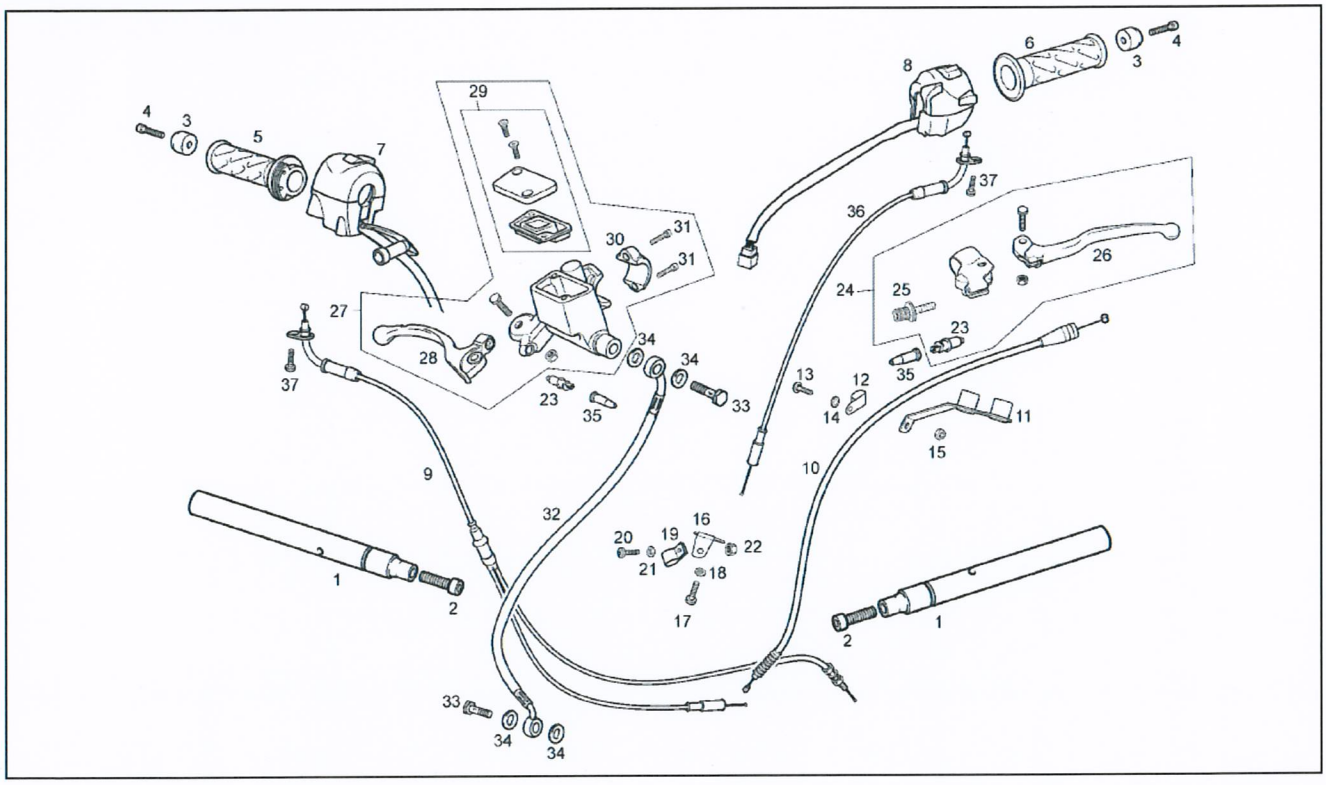

FILTERS: none

Pos.	Code	Description	Q.ty	Variants
1	86203R	Handlebars, half	1	
2	AP8150107	Hex socket screw M8x30	1	
3	866233	Anti.v weight, black	1	
4	294839	screw	1	
5	866266	Throttle grip	1	
6	00G00909071	LH hand grip	1	
7	AP8127592	RH lights selector	1	
8	00H02306171	LH lights selector	1	
9	866468	Throttle transmiss.	1	
10	866466	Clutch transmission	1	
11	866381	Cable support	1	
12	AP8101890	Black hose D8	1	
13	AP8152278	Screw w/ flange M6x16	1	
14	00402060001	Washer D6 DIN125 AZNB	1	
15	AP8152299	Self-locking nut M6	1	
16	866424	Cable guide support	1	
17	AP8152278	Screw w/ flange M6x16	1	
18	00402060001	Washer D6 DIN125 AZNB	1	
19	AP8101890	Black hose D8	1	
20	AP8152272	Screw w/ flange M5x12	1	
21	00402060001	Washer D6 DIN125 AZNB	1	
22	AP8152306	Self-locking nut m5	1	
23	B044409	Stop switch	1	
24	865951	Clutch lever cpl.	1	
25	00H00900351	Clutch cable register	1	
26	00H00904291	Clutch lever	1	
27	B044194	Front master cilinder	1	

Assembly	Tables
Code	09
Description	Handlebar
Review	1

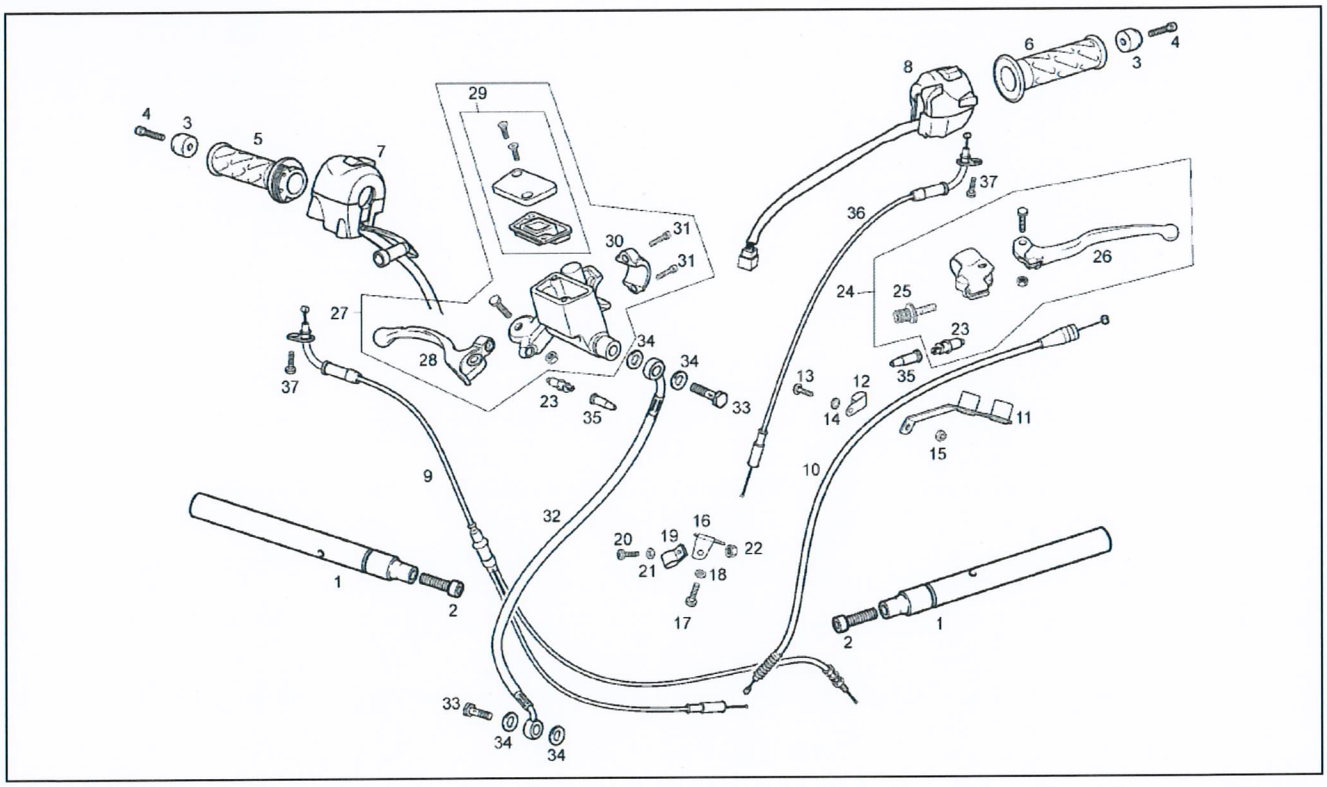

FILTERS: none

Pos.	Code	Description	Q.ty	Variants
28	B044198	Front brake lever	1	
29	B044197	Cover	1	
30	B044408	U-bolt	1	
31	00000004512	screw	1	
32	B044195	Front brake hose	1	
33	00006309260	Oil pipe screw	1	
34	00006321040	Washer	1	
35	00005010760	Cap	1	
36	866467	Cable	1	
37	00000012516	screw	1	

Assembly	Tables
Code	16
Description	Locks
Review	1

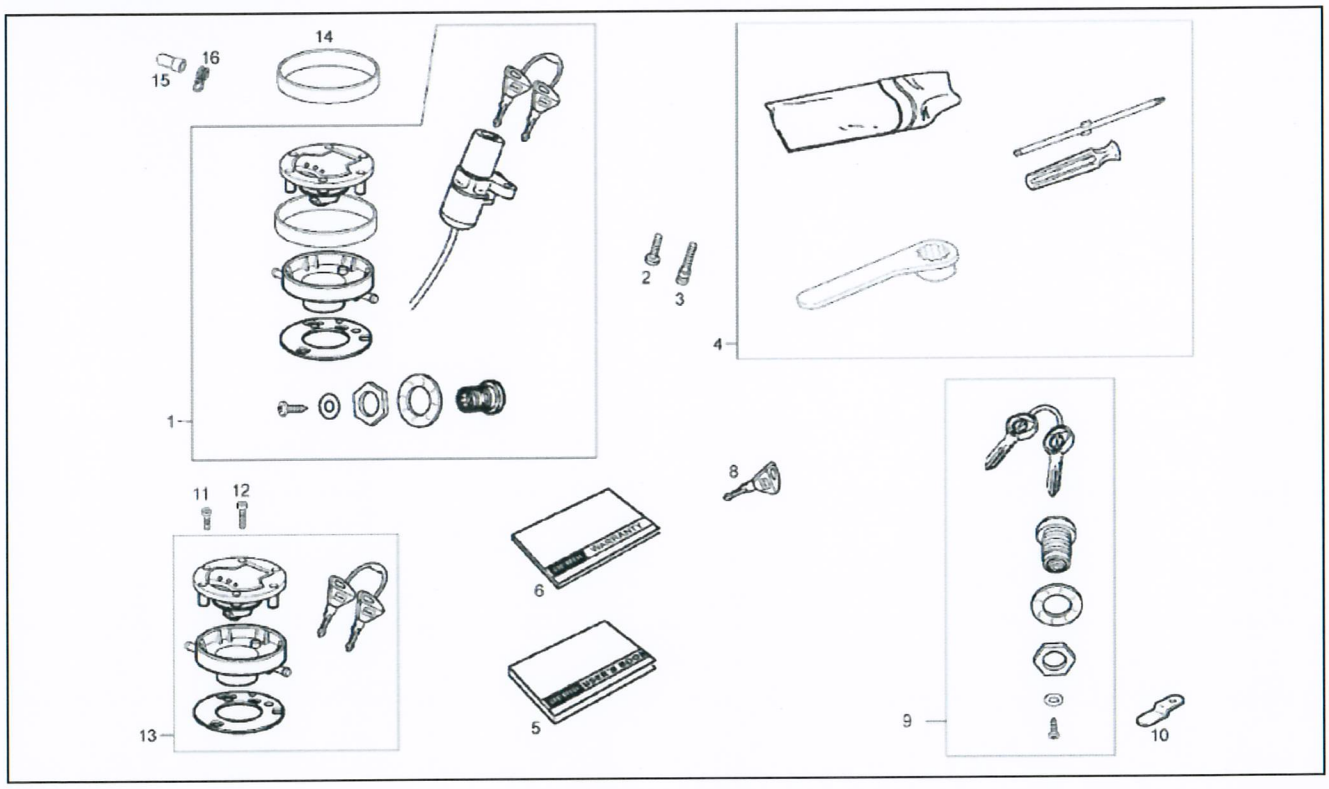

FILTERS: none

Pos.	Code	Description	Q.ty	Variants
1	865682	Lock kit	1	
2	00002084011	screw	1	
3	AP8150351	Shear rivet M8x40	1	
4	86129R	Tool kit	1	
5	866223	Op's handbook I-D-F-E-UK-NL	1	
6	665312	Warranty card	1	
8	862931	Key	1	
9	00H00600681	Locks	1	
10	00H00604141	Lever	1	
11	896174	Hex socket screw Black M5x12	1	
12	AP8150176	Hex socket screw	1	
13	863990	Cover	1	
14	866699	Plug gasket	1	
15	AP8144298	Breather plug	1	
16	AP8101595	Hose clamp D10,1	1	

Assembly	Tables
Code	25
Description	Oil pump
Review	1

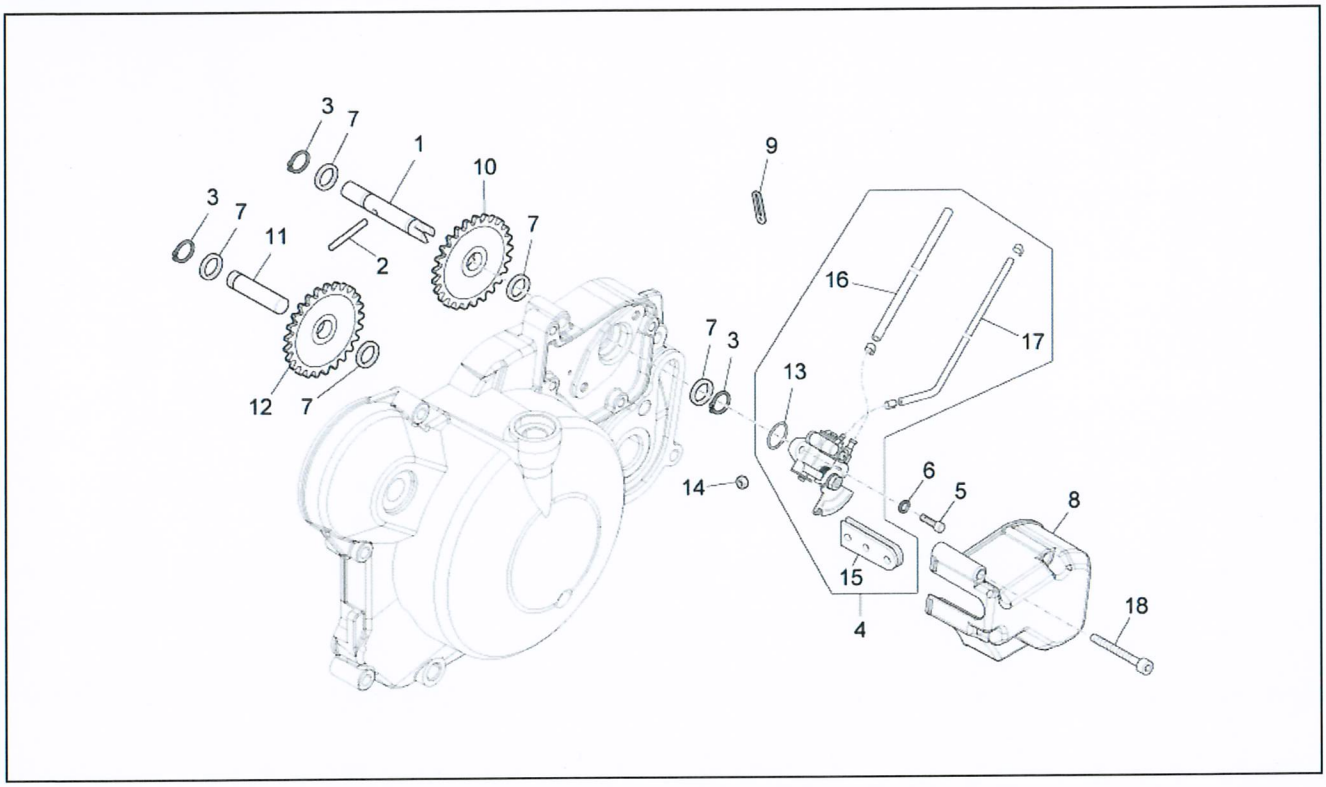

FILTERS: none

Pos.	Code	Description	Q.ty	Variants
1	847052	Oil pump shaft assy.	1	
2	847184	Pin	1	
3	006408	Safety washer	3	
4	847055	Oil pump	1	
5	847227	screw	2	
6	847226	Washer	2	
7	847183	Washer	4	
8	00H03706011	Cover	1	
9	866463	Cable guide	1	
10	847051	Gear Z=25	1	
11	847076	Shaft pin	1	
12	847053	Pinion Z13/24	1	
13	311163	Gasket	1	
14	866553	Nut M6x0,75	1	
15	876733	Fairlead cpl.	1	
16	CM101509	Oil inlet pipe	1	
17	CM101605	Oil outlet pipe	1	
18	00004154000	screw	1	

Assembly	Tables
Code	13
Description	Rear brake
Review	1

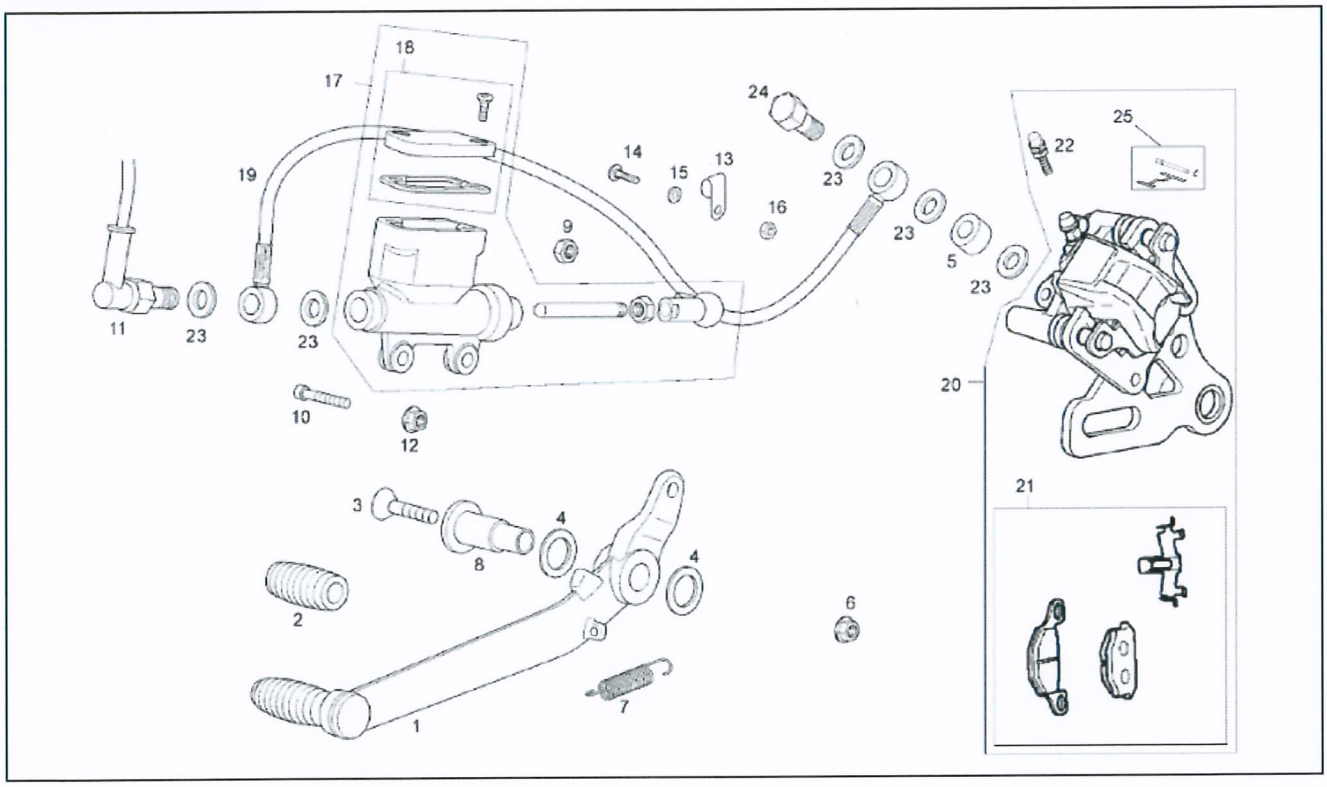

FILTERS: none

Pos.	Code	Description	Q.ty	Variants
1	AP8235012	Rear brake lever	1	
2	AP8120912	Lever rubber	1	
3	AP8150468	Screw M6x40	1	
4	AP8121697	Belleville spring	1	
5	865511	Bush	1	
6	AP8152299	Self-locking nut M6	1	
7	B044255	Rear brake lever spring	1	
8	866514	Bush	1	
9	AP8152299	Self-locking nut M6	1	
10	AP8152280	Screw w/ flange M6x25	1	
11	865493	Stop switch	1	
12	00026006001	Nut	1	
13	AP8101890	Black hose D8	1	
14	AP8152272	Screw w/ flange M5x12	1	
15	AP8150177	Washer 5,3X10X1	1	
16	00000023051	Nut 5M80	1	
17	B044203	Rear master cylinder	1	Technical specification:
18	B044488	Pump cover	1	Technical specification:
19	B044204	Rear brake hose	1	Technical specification:
20	B044205	Rear brake caliper	1	Technical specification:
21	B044223	Brake pads kit SBS S 60 HH	1	Technical specification:
21	B044224	Brake pads kit SBS SI 80 GG	1	Technical specification:
22	867240	Air bleed valve	1	Technical specification:
23	00006321040	Washer	1	
24	00006309260	Oil pipe screw	1	
25	B044412	Spring kit	1	Technical specification:

Assembly	Tables
Code	12
Description	Rear wheel
Review	1

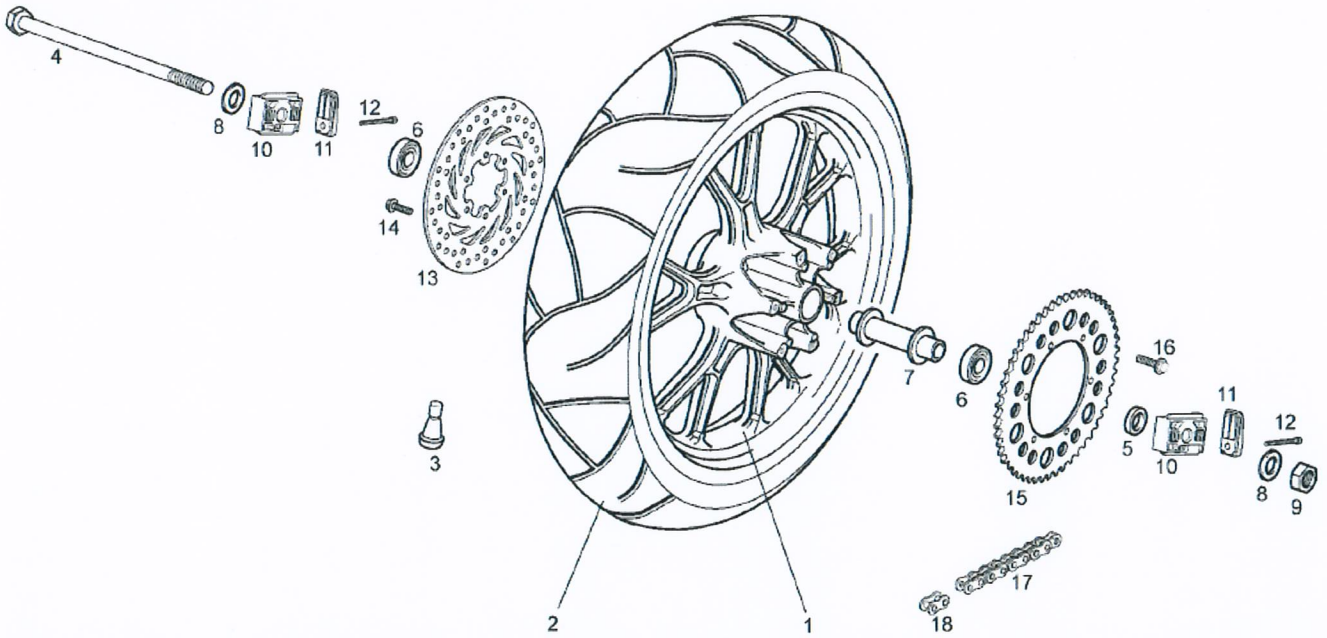

FILTERS: none

Pos.	Code	Description	Q.ty	Variants
1	00H01310381	Rear wheel, black	1	
2	899859	Rear tyre 130/70 Michelin	1	
3	AP8201546	Tubeless tyre valve	1	
4	865681	Wheel pin	1	
5	00H01203291	Spacer	1	
6	00058020200	Bearing	1	
7	00H01308091	Internal spacer	1	
8	866536	Spacer	2	
9	00H00300672	Nut	1	
10	00H01303171	Chain tensioner	1	
11	00H01301471	Plate	1	
12	AP8150277	Hex socket screw M8x50	1	
13	866115	Rear brake disc	1	
14	00H02402282	screw 6X20	1	
15	86182R	Chain ring Z=53	1	
16	00H02402282	screw 6X20	1	
17	00H01515201	Chain 132P	1	Technical specification: Switzerland [CH]
17	00H01502201	Chain 130P	1	
18	00H01501212	Connecting link	1	

Assembly	Tables
Code	08
Description	Saddle
Review	1

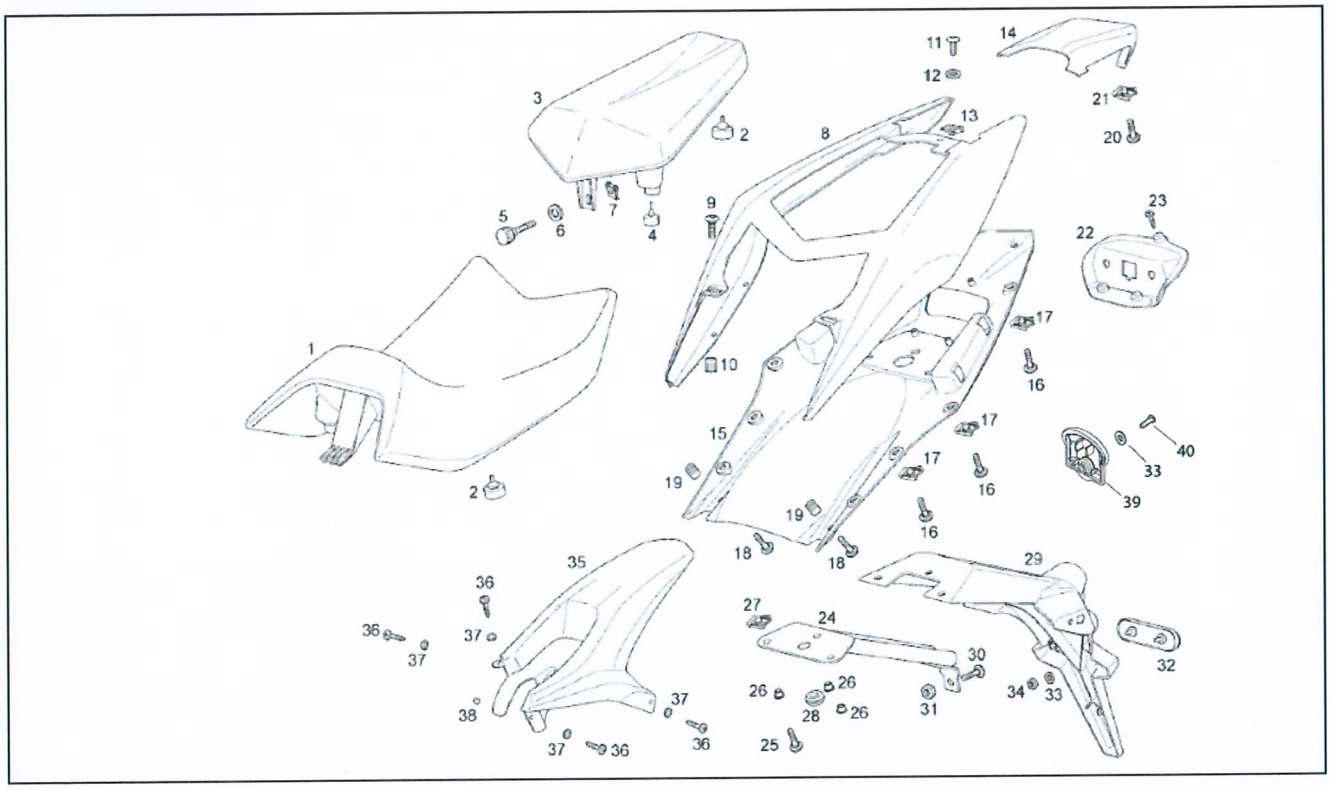

FILTERS: none

Pos.	Code	Description	Q.ty	Variants
1	8656610001	Driver saddle	1	
2	866700	Saddle rubber	1	
3	8656630002	Rear saddle	1	
4	866701	Saddle rubber	1	
5	00H06101251	screw	1	
6	AP8150179	Washer 6,6x18*	1	
7	254485	Spring plate M6	1	
8	86594100XN1	Rear fairing, black	1	Technical specification: Without Decal [ND]
9	00H01501701	screw	1	
10	AP8102544	Threaded rivet M6	1	
11	AP8152278	Screw w/ flange M6x16	1	
12	AP8150179	Washer 6,6x18*	1	
13	254485	Spring plate M6	1	
14	86594200W4N	Rear fairing, black	1	
15	865943	Tail fairing closing	1	
16	AP8152302	Screw w/ flange M5x12	1	
17	00G04401462	Nut D5	1	
18	00H01501701	screw	1	
19	AP8102544	Threaded rivet M6	1	
20	AP8152302	Screw w/ flange M5x12	1	
21	AP8102375	Clip m5	1	
22	866017	Rear headlight supp.	1	
23	AP8150444	Self-tapping screw	1	
24	865644	Number plate holder support	1	
25	AP8152280	Screw w/ flange M6x25	1	
26	00N01001821	Ring nut	1	
27	254485	Spring plate M6	1	

Assembly	Tables
Code	08
Description	Saddle
Review	1

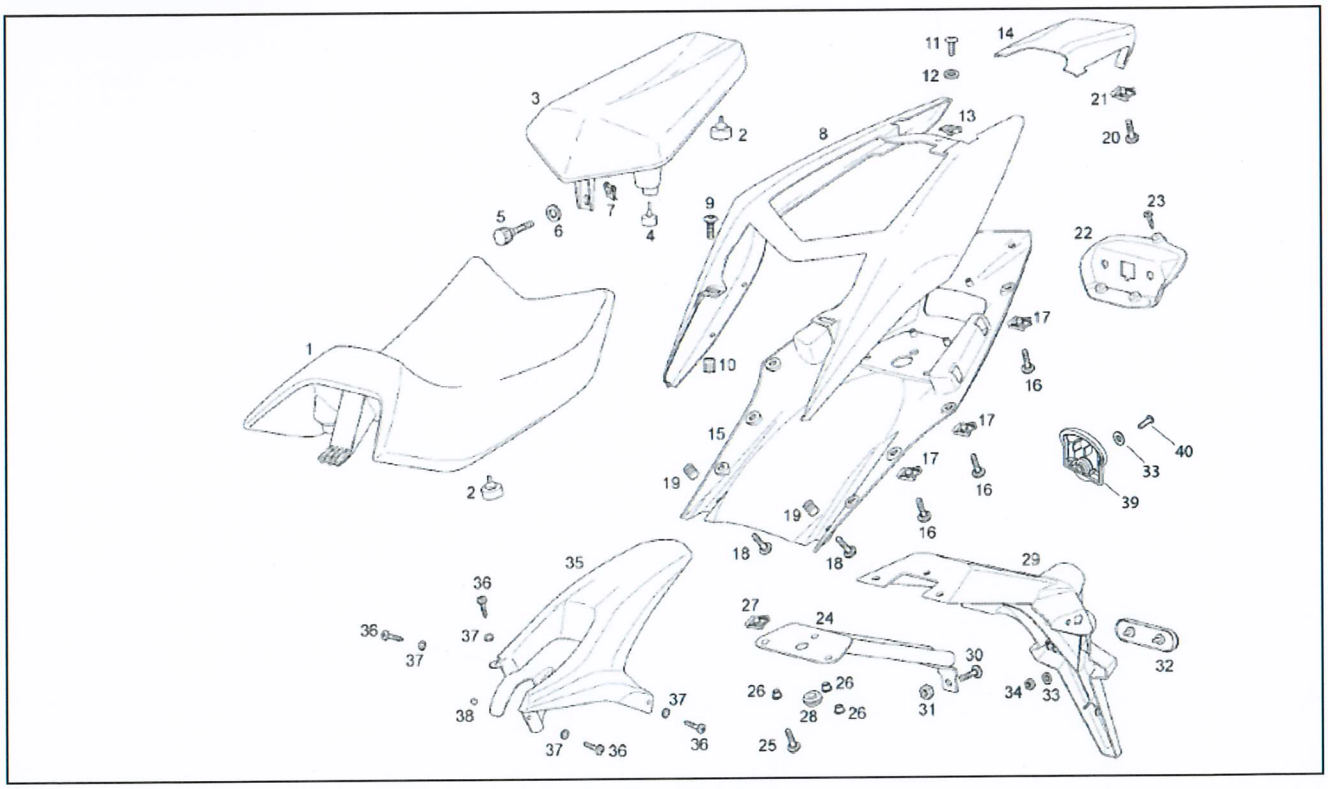

FILTERS: none

Pos.	Code	Description	Q.ty	Variants
28	00008915020	Grommet	1	
29	865643	Number plate holder	1	
30	00H01501701	screw	1	
31	254485	Spring plate M6	1	
32	AP8124718	Rear reflector, red	1	
33	AP8150248	Washer 5,5x15x1,6	1	
34	AP8150204	Nut M4	1	
35	B043209	Rear mudguard	1	
36	AP8150246	Screw	1	
37	AP8150248	Washer 5,5x15x1,6	1	
38	866654	Cap	1	
39	867094	License plate lamp cover	1	
40	00113031060	Self-tap screw	1	

Assembly	Tables
Code	19
Description	Selector
Review	1

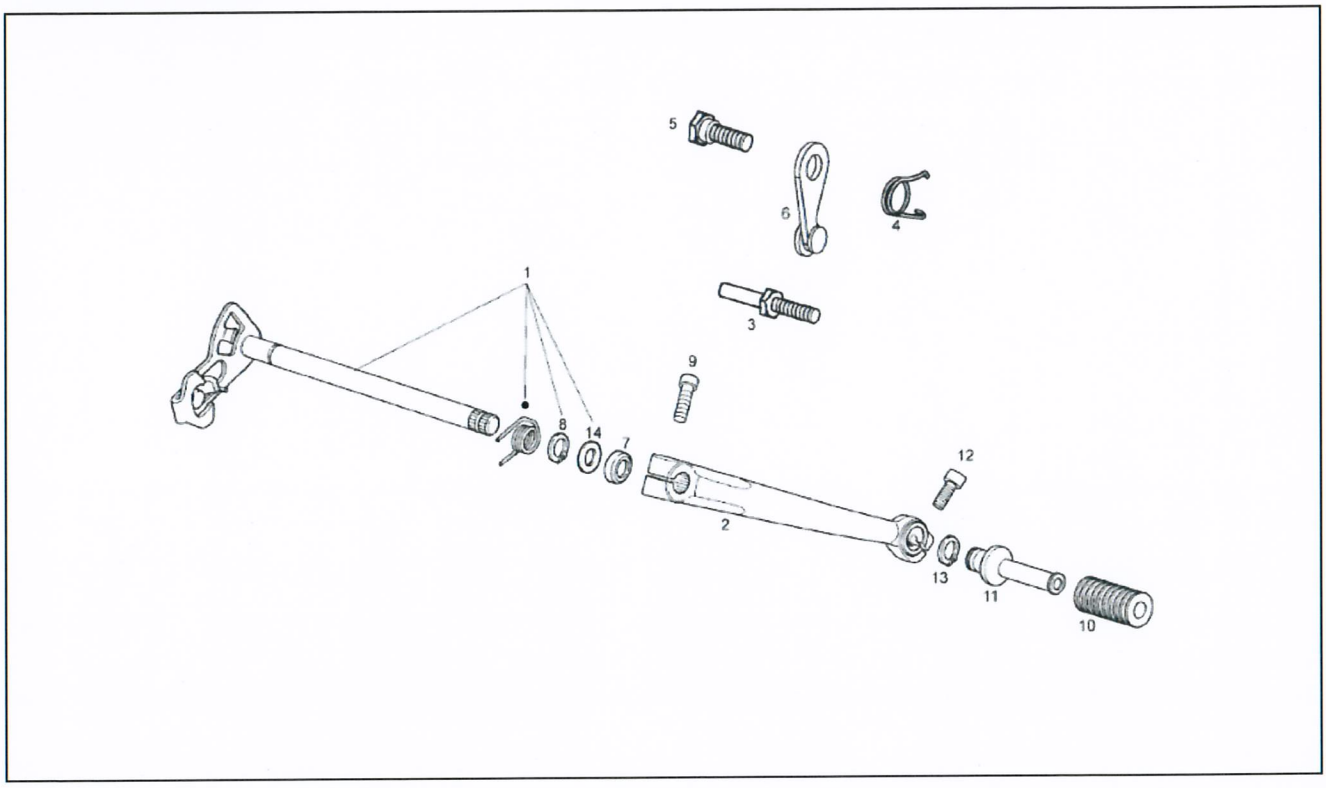

FILTERS: none

Pos.	Code	Description	Q.ty	Variants
1	8721654	Grip shift	1	
2	866162	Gear lever	1	
3	B018064	Gear selector pin	1	
4	847069	Spring	1	
5	879942	Special screw	1	
6	847068	Lever	1	
7	847075	Oil seal 12x20	1	
8	847228	Washer	1	
9	AP8150044	Hex socket screw M6x20	1	
10	AP8120912	Lever rubber	1	
11	AP8121221	Brake lever pin	1	
12	AP8152278	Screw w/ flange M6x16	1	
13	AP8150462	Circlip d9	1	
14	847228	Washer	1	

Assembly	Tables
Code	27
Description	Starter motor
Review	1

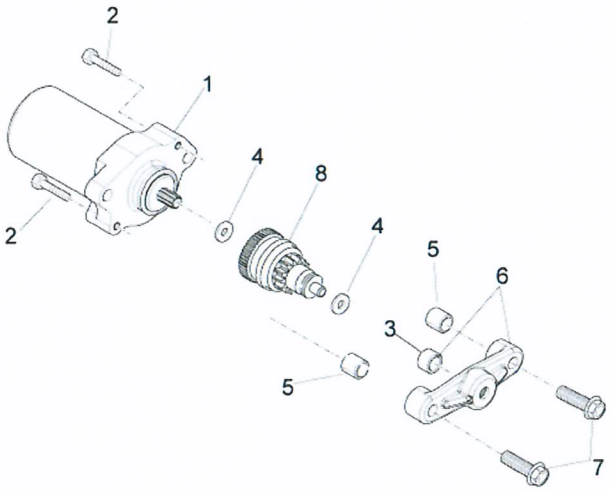

FILTERS: none

Pos.	Code	Description	Q.ty	Variants
1	82851R	Starter motor	1	
2	018639	Hex screw M6x20	1	
3	431860	Bush Ø8xØ12x8	1	
4	847261	Washer	1	
5	847241	Pin	1	
6	8470665	Maintenance	1	
7	B016792	Screw w/ flange M6x30	1	
8	289202	Complete gear unit	1	

Assembly	Tables
Code	03
Description	Swing arm - Shock absorber
Review	1

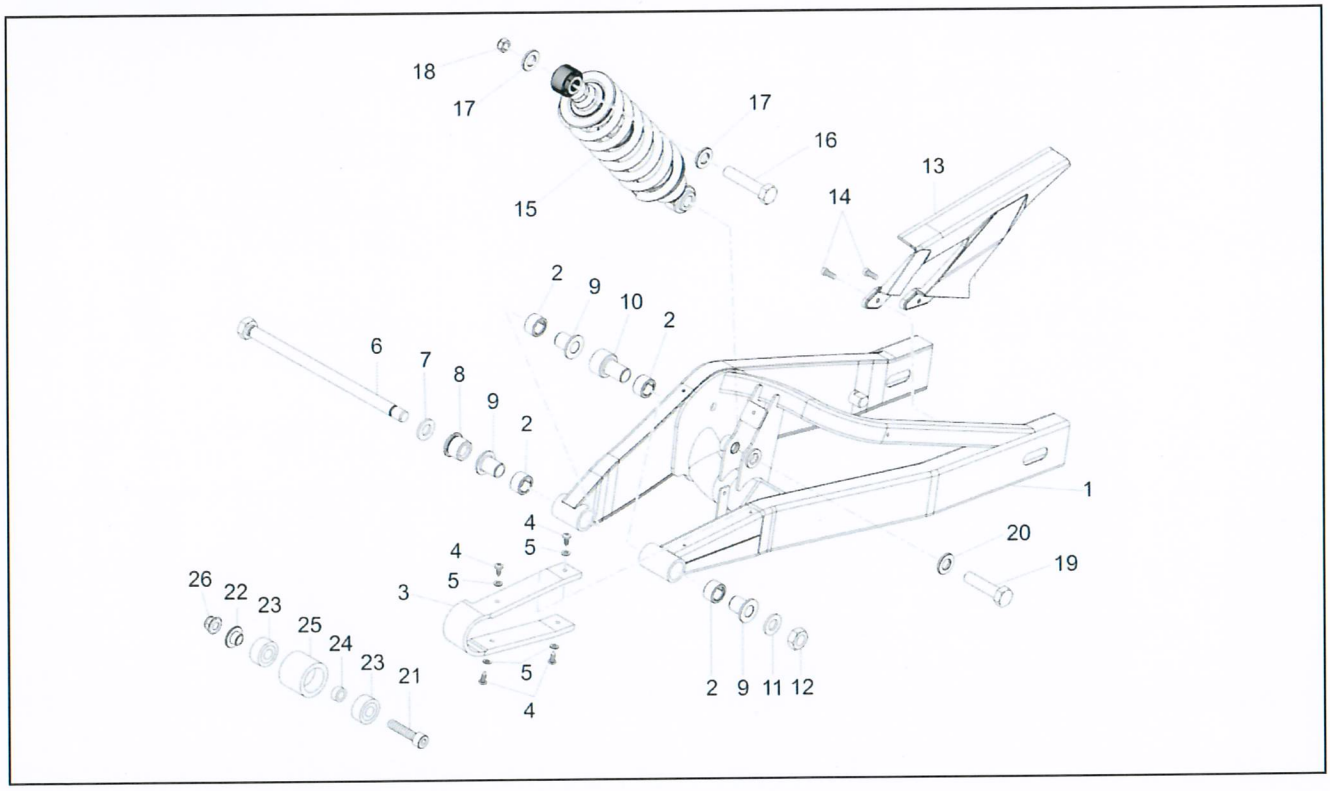

FILTERS: none

Pos.	Code	Description	Q.ty	Variants
1	89947400WN6	Swing arm, black	1	
2	00H00301811	Ring nut	1	
3	00H01804331	Chain guide plate	1	
4	AP8150246	Screw	1	
5	AP8150177	Washer 5,3X10X1	1	
6	00H00305411	Pin	1	
7	00032015000	Washer	1	
8	865615	Nut	1	
9	866756	LH spacer	1	
10	866062	Rear sw.arm piv.bush	1	
11	00032015000	Washer	1	
12	00H00300672	Nut	1	
13	B043207	Chain guard	1	
14	00016041301	screw	1	
15	8656670001	Rear shock absorber	1	
16	00H00303892	screw	1	
17	00001213190	Clearance bush	1	
18	00023112000	Nut 12MX175	1	
19	00H00302892	screw 12M175X50	1	
20	00001213190	Clearance bush	1	
21	AP8150164	Hex socket screw M8x45	1	
22	847183	Washer	1	
23	AP9100175	Ball bearing 8x22x7	1	
24	AP9100174	Spacer	1	
25	AP9100173	Black chain guide roller	1	
26	AP8152300	Self-locking nut M8	1	

Assembly	Tables
Code	04
Description	Tank
Review	1

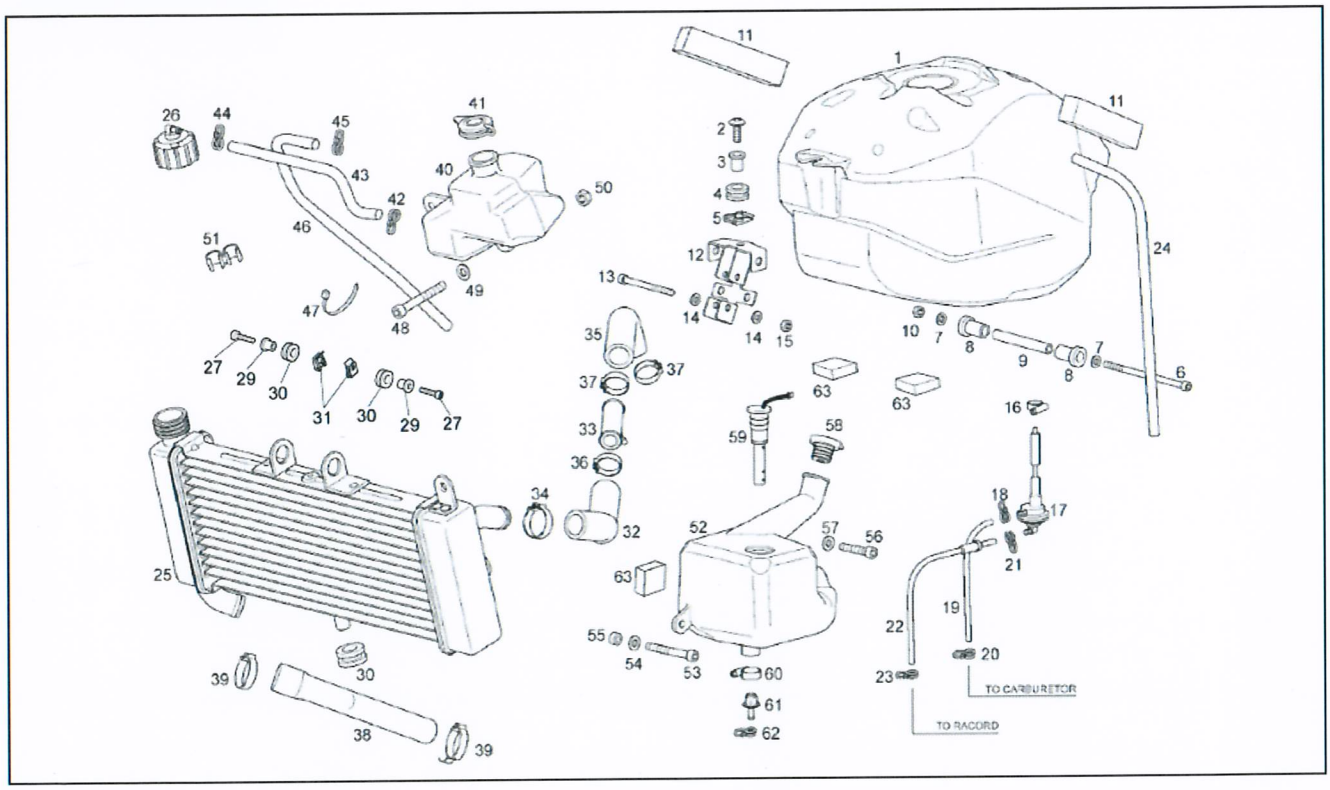

FILTERS: none

Pos.	Code	Description	Q.ty	Variants
1	865630	Fuel tank	1	
2	00H01503701	screw	1	
3	864109	Bush	1	
4	00H00403581	Silent-block	1	
5	254485	Spring plate M6	1	
6	478171	Hex socket screw M6x100	1	
7	AP8150179	Washer 6,6x18*	1	
8	866500	Fuel tank bush	2	
9	866164	Fuel tank spacer	1	
10	AP8152299	Self-locking nut M6	1	
11	AP8117073	Adhesive sponge	2	
12	865953	Tank support bracket	1	
13	AP8152281	Screw w/ flange M6x30	1	
14	00402060001	Washer D6 DIN125 AZNB	1	
15	AP8152299	Self-locking nut M6	1	
16	00G00400501	Hose clamp	1	
17	863699	Fuel cock	1	
18	AP8101595	Hose clamp D10,1	1	
19	AP8120952	Fuel pipe 5,5x10	1	
20	AP8101595	Hose clamp D10,1	1	
21	CM002901	Hose clamp	1	
22	866523	Filter cpl.	1	
23	CM002901	Hose clamp	1	
24	AP8120952	Fuel pipe 5,5x10	1	
25	867334	Water cooler	1	
26	861299	Cover	1	
27	AP8152280	Screw w/ flange M6x25	1	

Assembly	Tables
Code	04
Description	Tank
Review	1

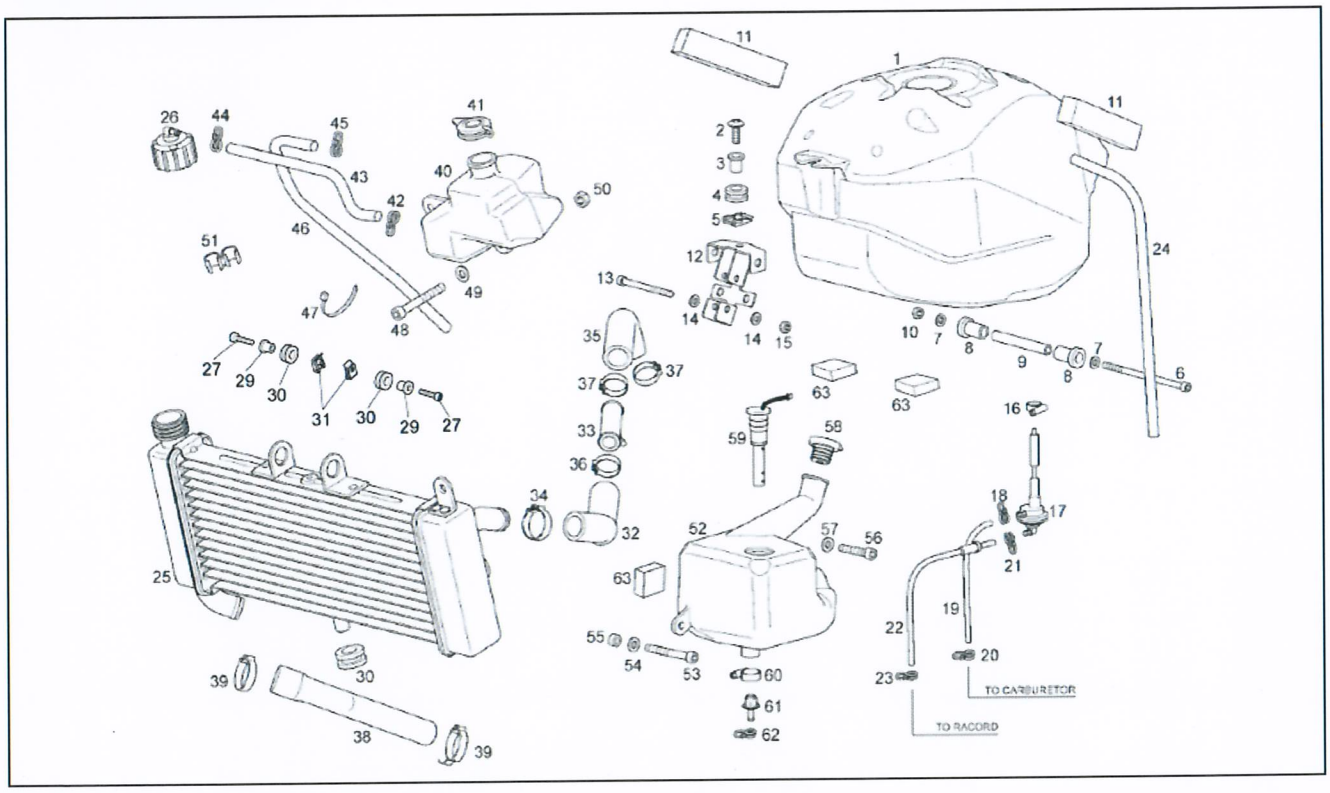

FILTERS: none

Pos.	Code	Description	Q.ty	Variants
29	AP8121679	T bush *	1	
30	00008915020	Grommet	1	
31	254485	Spring plate M6	1	
32	866350	Water cooler hose union	1	
33	866351	3-way union	1	
34	AP8101722	Hose clip D25x8,6	1	
35	866073	Head tube union	1	
36	AP8101722	Hose clip D25x8,6	1	
37	AP8101722	Hose clip D25x8,6	1	
38	866074	Water cooler-pump tube	1	
39	AP8101722	Hose clip D25x8,6	1	
40	866136	Coolant tank	1	
41	863943	Cover	1	
42	00A00410501	Hose clamp	1	
43	864572	Exp.tnk-rad. Hose	1	
44	00A00410501	Hose clamp	1	
45	00A00410501	Hose clamp	1	
46	864510	Breather pipe	1	
47	00D00900531	Hose clamp	1	
48	AP8150044	Hex socket screw M6x20	1	
49	AP8150179	Washer 6,6x18*	1	
50	254485	Spring plate M6	1	
51	00H03805091	Hose clamp	1	
52	866066	Oil tank	1	
53	AP9100433	Screw w/ flange M6x50	1	
54	AP8150179	Washer 6,6x18*	1	
55	866357	Spacer	1	

Assembly	Tables
Code	04
Description	Tank
Review	1

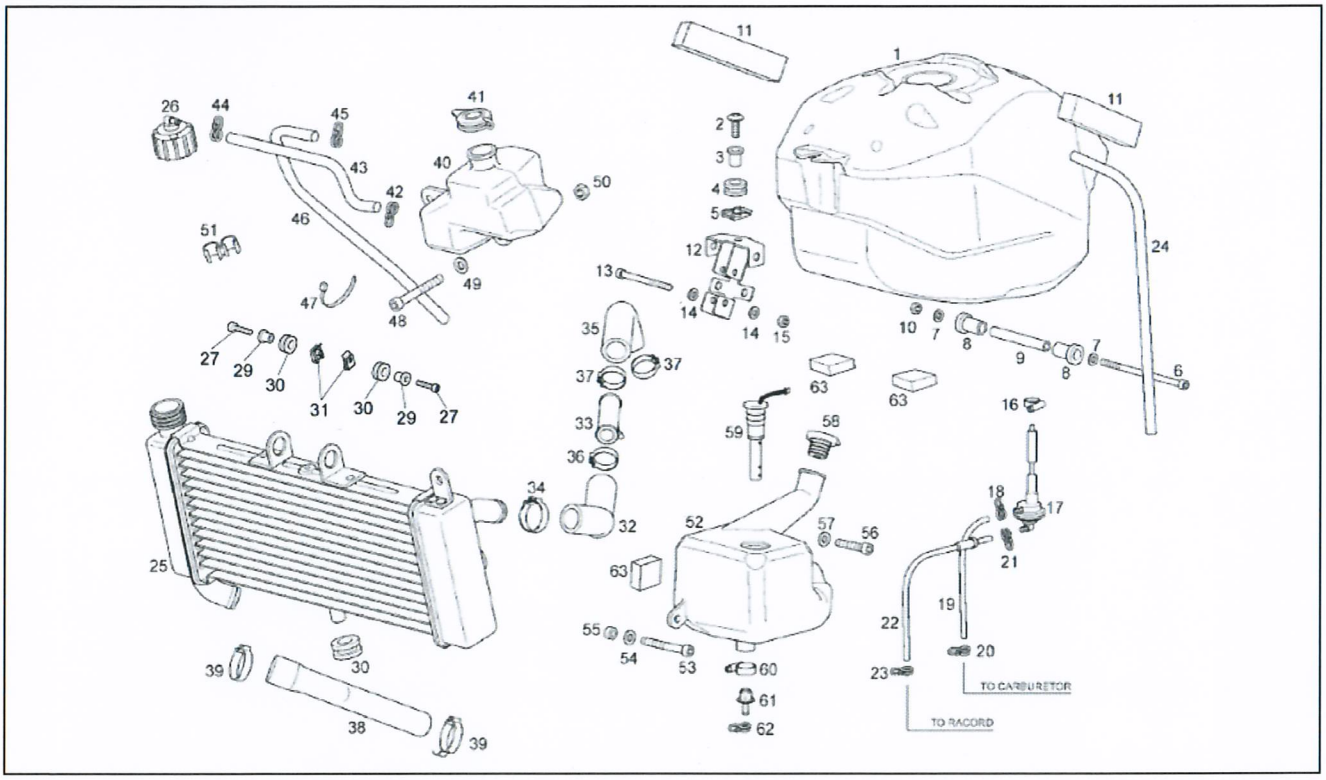

FILTERS: none

Pos.	Code	Description	Q.ty	Variants
56	AP8152282	Screw w/ flange M6x35	1	
57	AP8150179	Washer 6,6x18*	1	
58	00H03702061	Oil filler cap	1	
59	867530	Oil level sensor	1	
60	00G00400501	Hose clamp	1	
61	00G03700411	Oil filter	1	
62	CM002901	Hose clamp	1	
63	AP8117003	Adhesive sponge 15X5	1	

Assembly	Tables
Code	26
Description	Water pump
Review	1

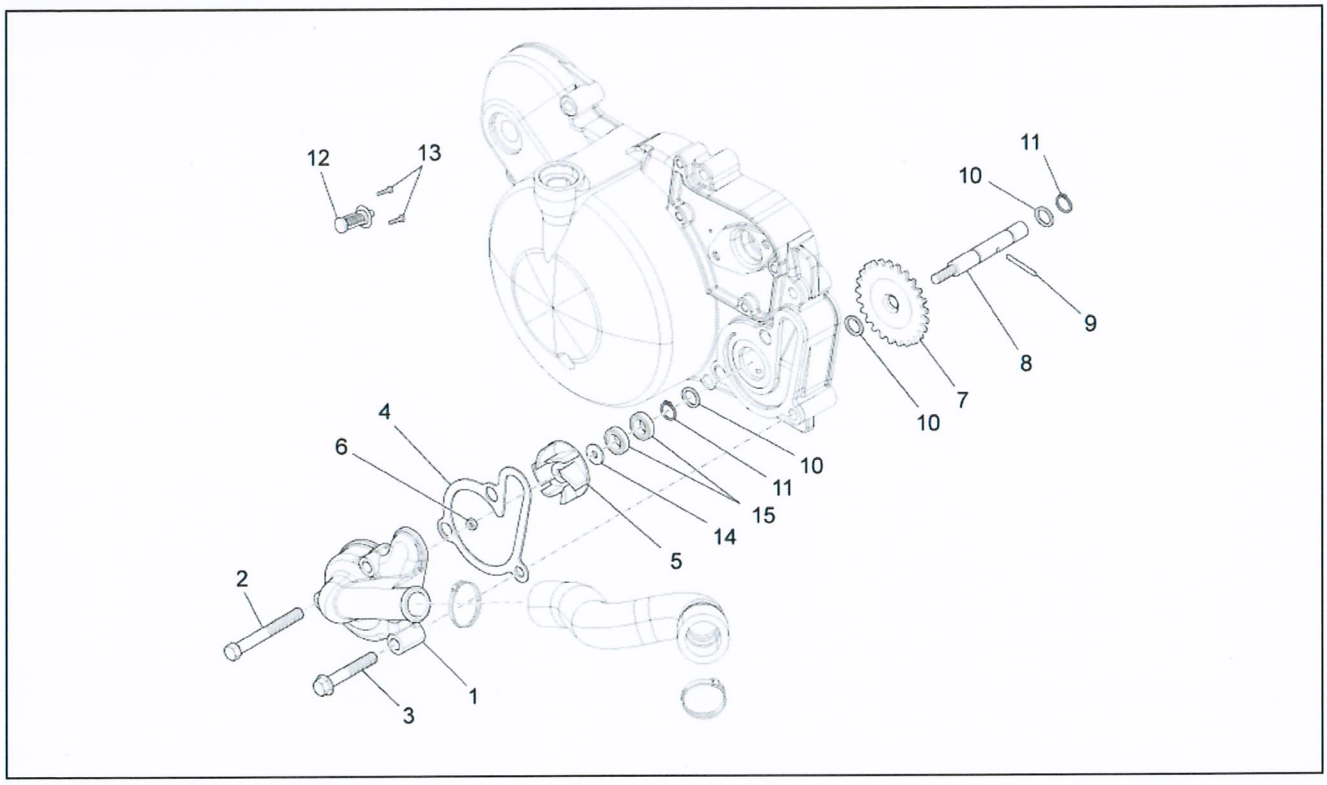

FILTERS: none

Pos.	Code	Description	Q.ty	Variants
1	CM1508024	Water pump cover	1	
2	B016425	Screw w/ flange M6x60	1	
3	B016792	Screw w/ flange M6x30	2	
4	879030	Gasket	1	
5	847079	Impeller	1	
6	847067	Nut	1	
7	847080	Pinion Z=32	1	
8	847078	Water pump shaft assy.	1	
9	847184	Pin	1	
10	847183	Washer	3	
11	006408	Safety washer	2	
12	483395	Thermostat	1	
13	018644	screw	2	
14	847181	Washer	1	
15	847077	Gasket ring	2	